OSRAM GW PLLRA2.CM

Datasheet

Published by ams-OSRAM AG
Tobelbader Strasse 30, 8141 Premstaetten, Austria
Phone +43 3136 500-0
ams-osram.com
© All rights reserved

OSCONIQ™ C 2424

GW PLLRA2.CM

OSCONIQ™ C 2424 in a chip-scale-package footprint packs a powerful luminous flux & efficiency within a small footprint. The LEDs can be densely clustered and scalable to multiply for higher flux output. It is an ideal solution for applications that require compact size and high power.

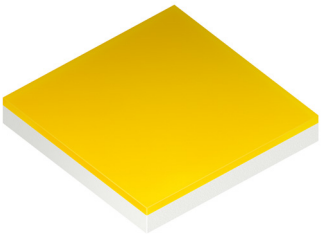

Applications

- Entertainment
- Indoor lighting
- Outdoor & industrial lighting

Features

- Typ. Radiation: 120° (Lambertian emitter)
- Color temperature: 2200K - 6500K
- CRI: 90 (min.), 92 (typ.), R9: 50 (min.)
- ESD: 2 kV acc. to ANSI/ESDA/JEDEC JS-001 (HBM, Class 2)
- Luminous Flux: typ. 268 lm @ 4000 K, 85 °C
- Luminous efficacy: typ. 137 lm/W @ 4000 K, 85 °C

Ordering Information

Type	Color temperature	Luminous Flux [1] I_F = 700 mA Φ_V	Ordering Code
GW PLLRA2.CM-M2MF-XX510-1	2200 K	190 ... 280 lm	Q65115A1904
GW PLLRA2.CM-M5N3-XX58-1	2700 K	220 ... 310 lm	Q65115A1874
GW PLLRA2.CM-M6N5-XX57-1	3000 K	230 ... 330 lm	Q65115A1873
GW PLLRA2.CM-M7N7-XX56-1	3500 K	240 ... 350 lm	Q65115A1872
GW PLLRA2.CM-M8N7-XX55-1	4000 K	250 ... 350 lm	Q65115A1871
GW PLLRA2.CM-M9N7-XX53-1	5000 K	260 ... 350 lm	Q65115A1869
GW PLLRA2.CM-M9N7-XX52-1	5700 K	260 ... 350 lm	Q65115A1868
GW PLLRA2.CM-MFN7-XX51-1	6500 K	270 ... 350 lm	Q65115A1867

Maximum Ratings

Parameter	Symbol		Values
Operating Temperature	T_{op}	min. max.	-40 °C 105 °C
Storage Temperature	T_{stg}	min. max.	-40 °C 125 °C
Junction Temperature	T_j	max.	135 °C
Forward Current T_J = 85 °C	I_F	min. max.	100 mA 1400 mA
Surge Current t ≤ 10 µs; D = 0.005 ; T_J = 85 °C	I_{FS}	max.	2000 mA
Reverse voltage [2)]	V_R		Not designed for reverse operation
ESD withstand voltage acc. to ANSI/ESDA/JEDEC JS-001 (HBM, Class 2)	V_{ESD}		2 kV

Characteristics

I_F = 700 mA; T_J = 85 °C

Parameter	Symbol		Values
Viewing angle at 50% I_V	2φ	typ.	120 °
Forward Voltage [3] I_F = 700 mA	V_F	min. typ. max.	2.60 V 2.80 V 3.20 V
Reverse current [2]	I_R		Not designed for reverse operation
Color Rendering Index [4]	CRI	min. typ.	90 92
Color Rendering Index (R9) [4]	CRI (R9)	min.	50
Electrical thermal resistance junction/solderpoint with efficiency η_e = 49.2 %	$R_{thJS\ elec.}$	typ.	2.2 K / W

Brightness Groups

Group	Luminous Flux [1] I_F = 700 mA min. Φ_V	Luminous Flux [1] I_F = 700 mA max. Φ_V
M2	190 lm	200 lm
M3	200 lm	210 lm
M4	210 lm	220 lm
M5	220 lm	230 lm
M6	230 lm	240 lm
M7	240 lm	250 lm
M8	250 lm	260 lm
M9	260 lm	270 lm
MF	270 lm	280 lm
N1	280 lm	290 lm
N2	290 lm	300 lm
N3	300 lm	310 lm
N4	310 lm	320 lm
N5	320 lm	330 lm
N6	330 lm	340 lm
N7	340 lm	350 lm

Forward Voltage Groups

Group	Forward Voltage [3] I_F = 700 mA min. V_F	Forward Voltage [3] I_F = 700 mA max. V_F
K1	2.60 V	2.70 V
K2	2.70 V	2.80 V
L1	2.80 V	2.90 V
L2	2.90 V	3.00 V
M1	3.00 V	3.10 V
M2	3.10 V	3.20 V

Chromaticity Coordinate Groups [5)]

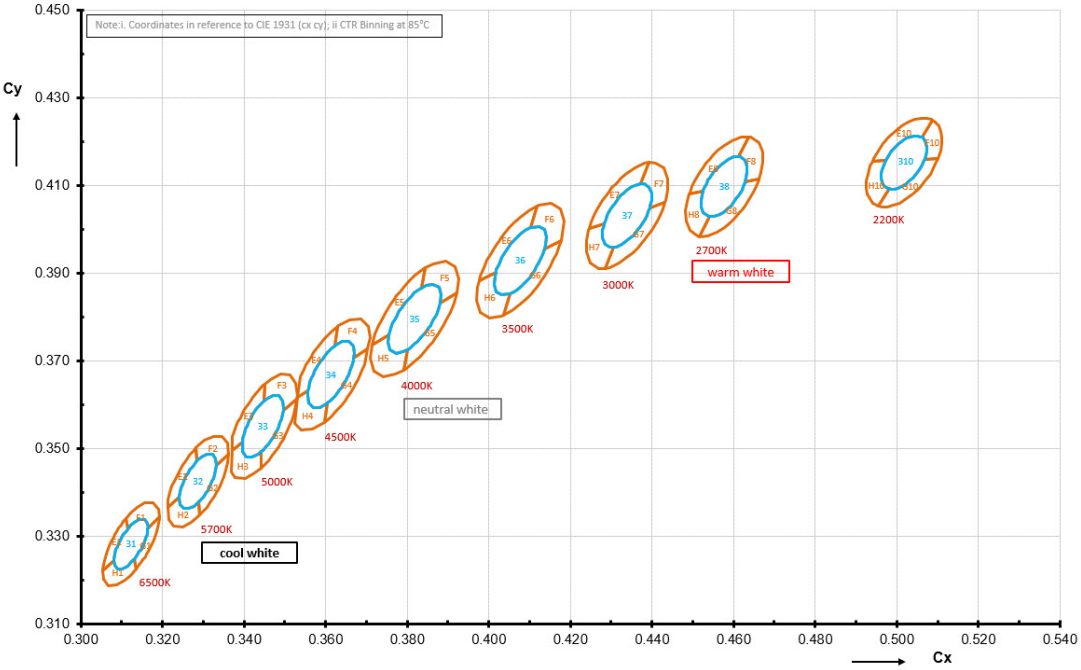

Chromaticity Coordinate Groups

CCT	Center Cx	Center Cy	3step a	3step b	5step a	5step b	Ø
2200 K	0.5020	0.4156	0.0072	0.004	0.012	0.0067	39.9
2700 K	0.4577	0.4098	0.008	0.0041	0.0133	0.0068	54.1
3000 K	0.4339	0.4032	0.0086	0.0042	0.0142	0.0069	53.7
3500 K	0.4077	0.3929	0.0093	0.0042	0.0155	0.0069	53.9
4000 K	0.3818	0.3796	0.0094	0.0041	0.0157	0.0068	53.4
5000 K	0.3446	0.3551	0.0081	0.0035	0.0135	0.0059	59.8
5700 K	0.3287	0.3425	0.0072	0.0032	0.0119	0.0052	58.8
6500 K	0.3123	0.3282	0.0066	0.0027	0.011	0.0045	58.1

		1		2		3		4		5	
CCT	Group	Cx	Cy	Cx	Cy	Cx	Cy	Cx	Cy	Cx	Cy
2200 K	E	0.5088	0.4249	0.4941	0.4156	0.4973	0.4157	0.5061	0.4210		
	F	0.5088	0.4249	0.5101	0.4161	0.5068	0.4160	0.5061	0.4210		
	G	0.5101	0.4161	0.4955	0.4054	0.4981	0.4093	0.5068	0.4158		
	H	0.4981	0.4093	0.4973	0.4157	0.4941	0.4156	0.4955	0.4054		
2700 K	E	0.4637	0.4212	0.4491	0.4081	0.4526	0.4088	0.4613	0.4166		
	F	0.4637	0.4212	0.4663	0.4115	0.4628	0.4108	0.4613	0.4166		
	G	0.4663	0.4115	0.4517	0.3984	0.4541	0.4030	0.4628	0.4108		
	H	0.4541	0.4030	0.4526	0.4088	0.4491	0.4081	0.4517	0.3984		
3000 K	E	0.4393	0.4153	0.4246	0.4002	0.4283	0.4014	0.4371	0.4105		
	F	0.4393	0.4153	0.4432	0.4062	0.4395	0.4050	0.4371	0.4105		
	G	0.4432	0.4062	0.4285	0.3911	0.4307	0.3960	0.4395	0.4050		
	H	0.4307	0.3960	0.4283	0.4014	0.4246	0.4002	0.4285	0.3911		
3500 K	E	0.4118	0.4054	0.3977	0.3883	0.4017	0.3902	0.4102	0.4004		
	F	0.4118	0.4054	0.4177	0.3975	0.4137	0.3956	0.4102	0.4004		
	G	0.4177	0.3975	0.4036	0.3804	0.4052	0.3854	0.4137	0.3956		
	H	0.4052	0.3854	0.4017	0.3902	0.3977	0.3883	0.4036	0.3804		
4000 K	E	0.3845	0.3913	0.3714	0.3737	0.3756	0.3760	0.3834	0.3866		
	F	0.3845	0.3913	0.3922	0.3855	0.3880	0.3832	0.3834	0.3866		
	G	0.3922	0.3855	0.3791	0.3679	0.3802	0.3726	0.3880	0.3832		
	H	0.3802	0.3726	0.3756	0.3760	0.3714	0.3737	0.3791	0.3679		
5000 K	E	0.3451	0.3648	0.3372	0.3528	0.3371	0.3496	0.3396	0.3514	0.3449	0.3609
	F	0.3451	0.3648	0.3530	0.3612	0.3496	0.3588	0.3449	0.3609		
	G	0.3530	0.3612	0.3441	0.3454	0.3443	0.3493	0.3496	0.3588		
	H	0.3443	0.3493	0.3396	0.3514	0.3371	0.3496	0.3369	0.3445	0.3441	0.3454
5700 K	E	0.3283	0.3502	0.3212	0.3373	0.3213	0.3365	0.3242	0.3388	0.3284	0.3471
	F	0.3283	0.3502	0.3363	0.3486	0.3332	0.3462	0.3284	0.3471		
	G	0.3363	0.3486	0.3291	0.3348	0.3290	0.3379	0.3332	0.3462		
	H	0.3291	0.3348	0.3215	0.3337	0.3213	0.3365	0.3242	0.3388	0.3290	0.3379
6500 K	E	0.3110	0.3340	0.3054	0.3220	0.3082	0.3245	0.3115	0.3317		
	F	0.3110	0.3340	0.3192	0.3344	0.3165	0.3319	0.3115	0.3317		
	G	0.3192	0.3344	0.3136	0.3224	0.3131	0.3247	0.3165	0.3319		
	H	0.3136	0.3224	0.3054	0.3220	0.3082	0.3245	0.3131	0.3247		

Group Name on Label

Example: M2-35-K1

Brightness	Color Chromaticity	Forward Voltage
M2	35	K1

Relative Spectral Emission [6)]

$\Phi_{rel} = f(\lambda)$; $I_F = 700$ mA; $T_J = 85$ °C

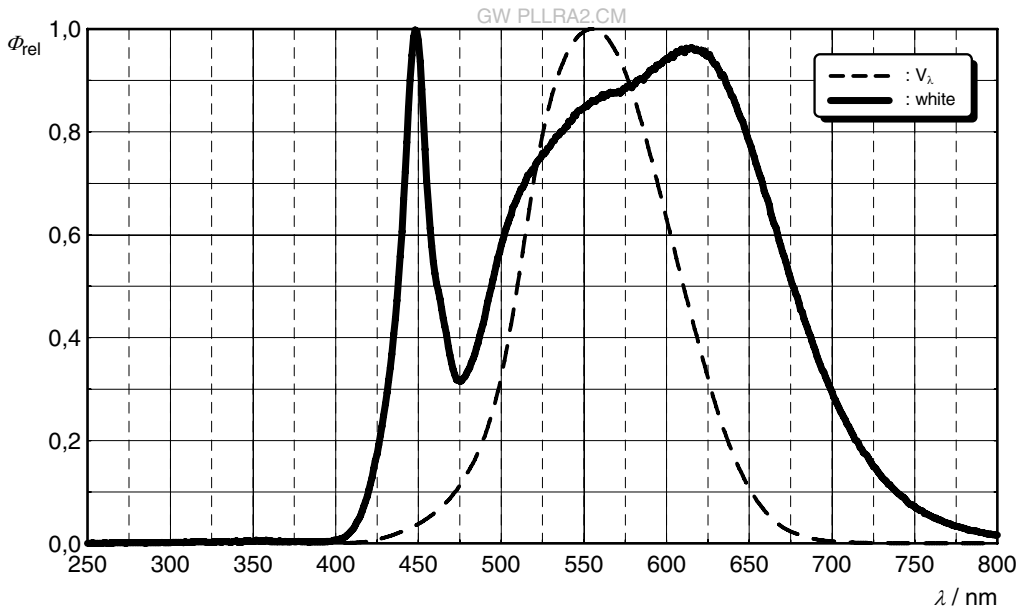

Radiation Characteristics [6)]

$I_{rel} = f(\varphi)$; $T_J = 85$ °C

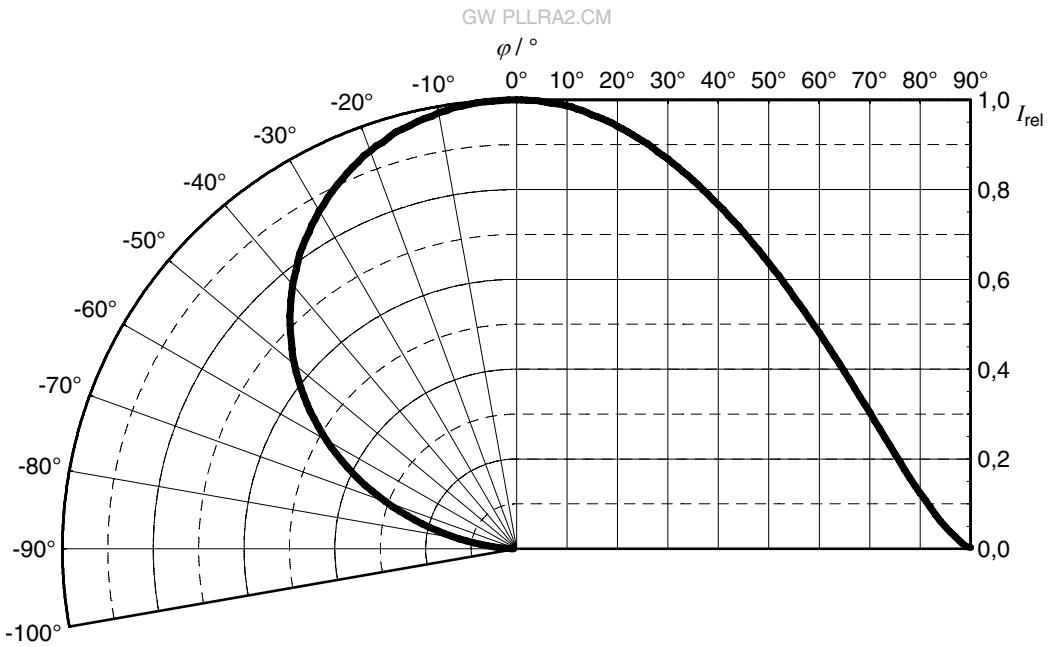

Forward current [6)]

$I_F = f(V_F)$; T_J = 85 °C

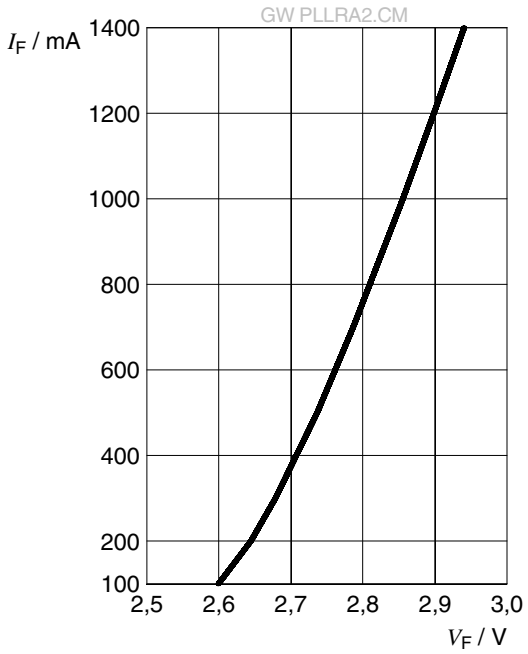

Relative Luminous Flux [6), 7)]

$\Phi_v/\Phi_v(700\ mA) = f(I_F)$; T_J = 85 °C

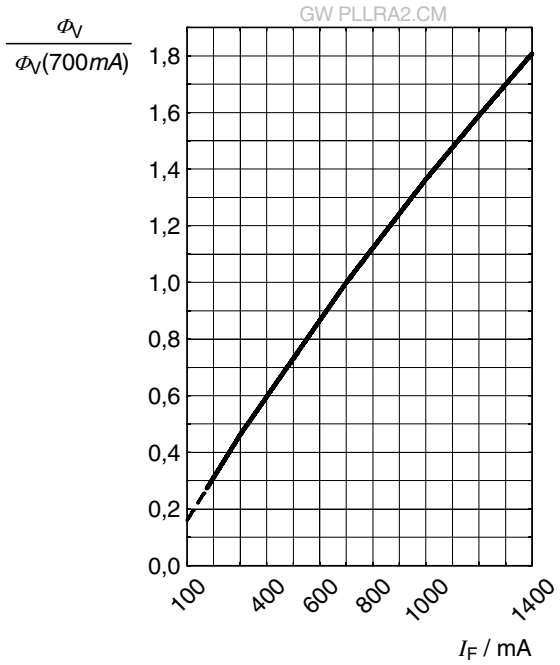

Chromaticity Coordinate Shift [6)]

Cx, Cy = $f(I_F)$; T_J = 85 °C

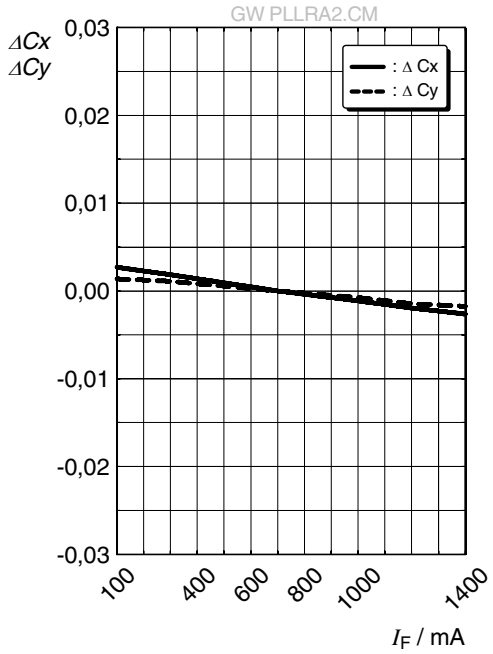

Forward Voltage [6)]

$\Delta V_F = V_F - V_F(85\ °C) = f(T_j)$; $I_F = 700$ mA

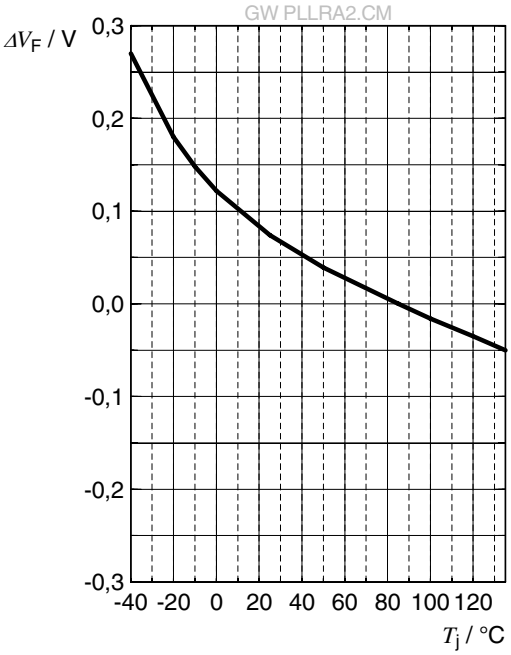

Relative Luminous Flux [6)]

$\Phi_v/\Phi_v(85\ °C) = f(T_j)$; $I_F = 700$ mA

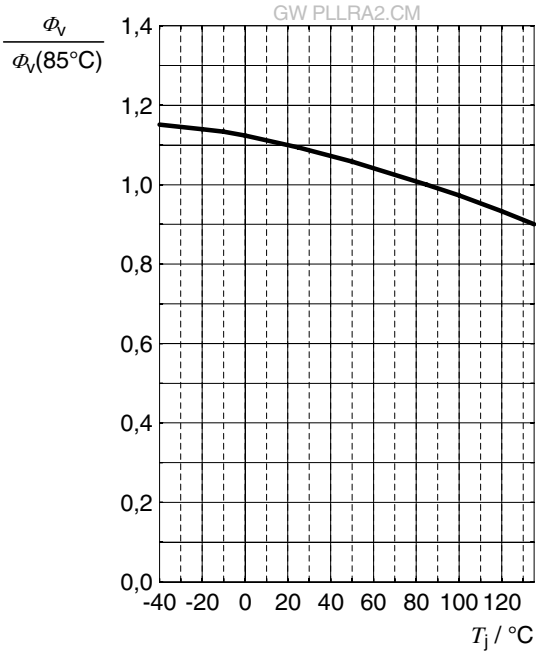

Chromaticity Coordinate Shift [6)]

Cx, Cy = $f(T_j)$; $I_F = 700$ mA

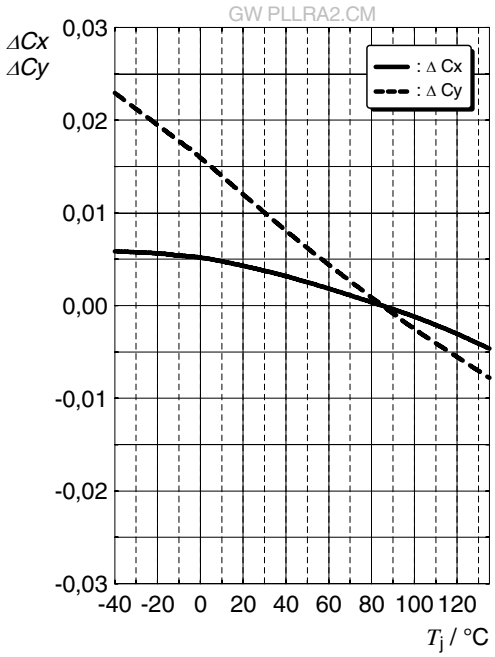

Max. Permissible Forward Current [8)]

$I_F = f(T)$

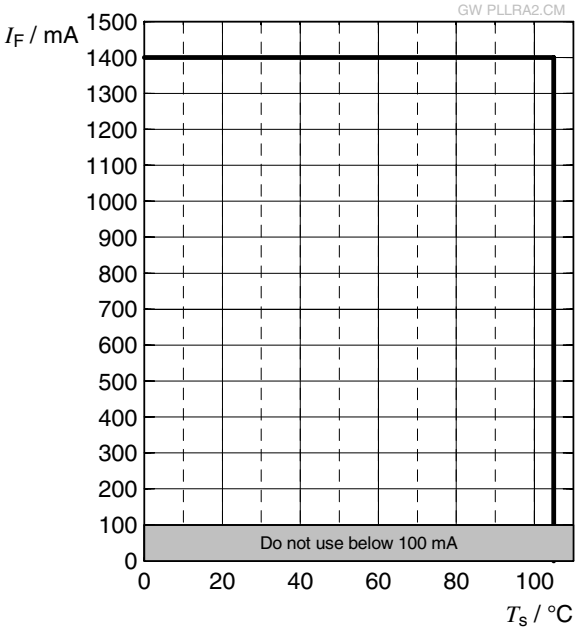

Dimensional Drawing [9)]

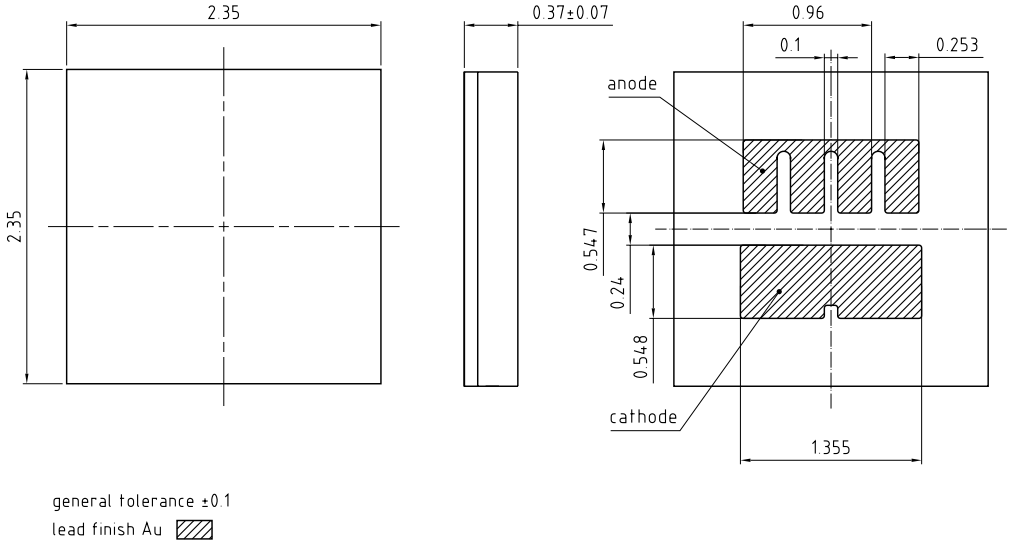

Further Information:

Approximate Weight: 5.4 mg

Package marking: Cathode

Recommended Solder Pad [9)]

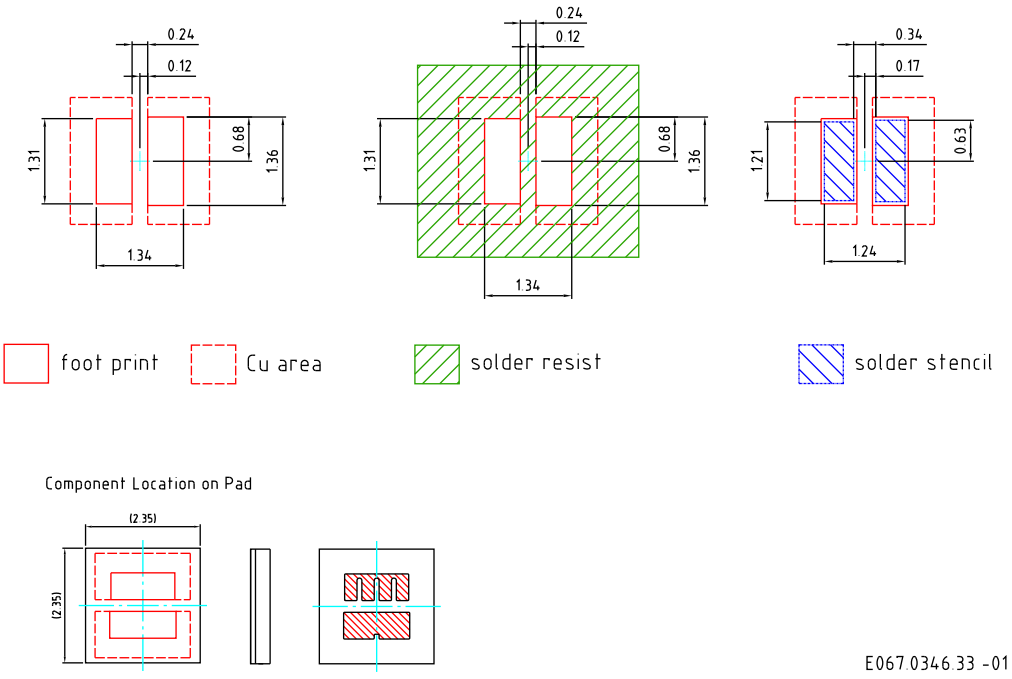

Reflow Soldering Profile

Product complies to MSL Level 2 acc. to JEDEC J-STD-020E

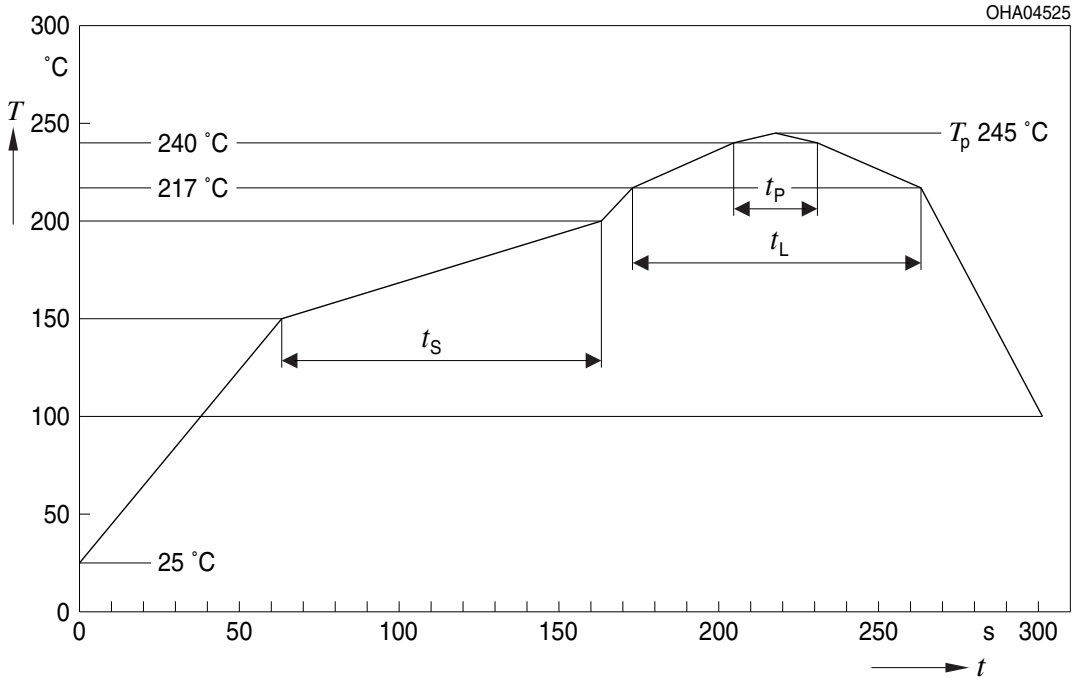

Profile Feature	Symbol	Pb-Free (SnAgCu) Assembly			Unit
		Minimum	Recommendation	Maximum	
Ramp-up rate to preheat*) 25 °C to 150 °C			2	3	K/s
Time t_S T_{Smin} to T_{Smax}	t_S	60	100	120	s
Ramp-up rate to peak*) T_{Smax} to T_P			2	3	K/s
Liquidus temperature	T_L		217		°C
Time above liquidus temperature	t_L		80	100	s
Peak temperature	T_P		245	260	°C
Time within 5 °C of the specified peak temperature T_P - 5 K	t_P	10	20	30	s
Ramp-down rate* T_P to 100 °C			3	6	K/s
Time 25 °C to T_P				480	s

All temperatures refer to the center of the package, measured on the top of the component
* slope calculation DT/Dt: Dt max. 5 s; fulfillment for the whole T-range

Taping [9)]

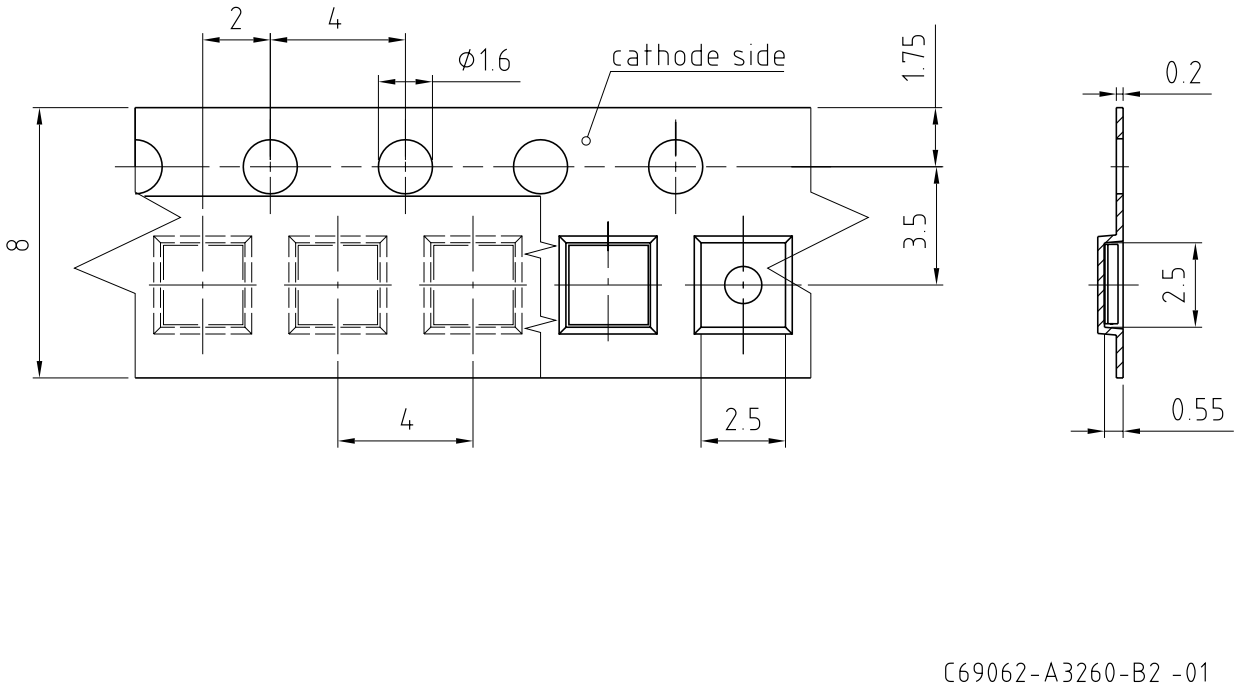

Tape and Reel [10)]

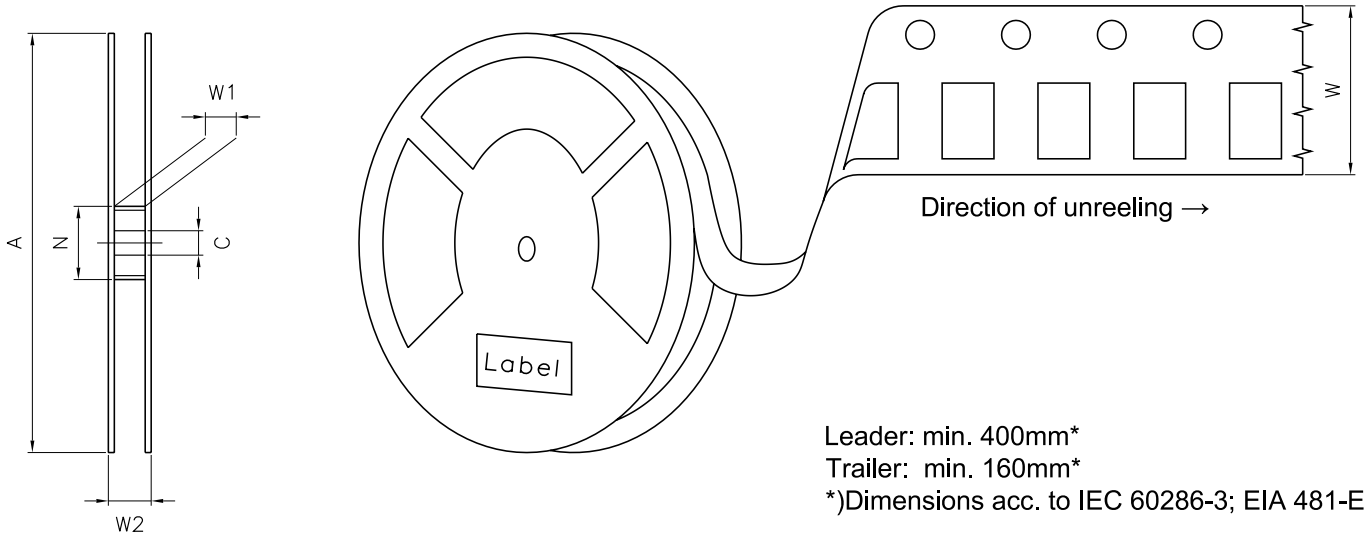

Leader: min. 400mm*
Trailer: min. 160mm*
*)Dimensions acc. to IEC 60286-3; EIA 481-E

Reel Dimensions

A	W	N_{min}	W_1	$W_{2\,max}$	Pieces per PU
180 mm	8 + 0.3 / - 0.1 mm	60 mm	8.4 + 2 mm	14.4 mm	4000

Barcode-Product-Label (BPL)

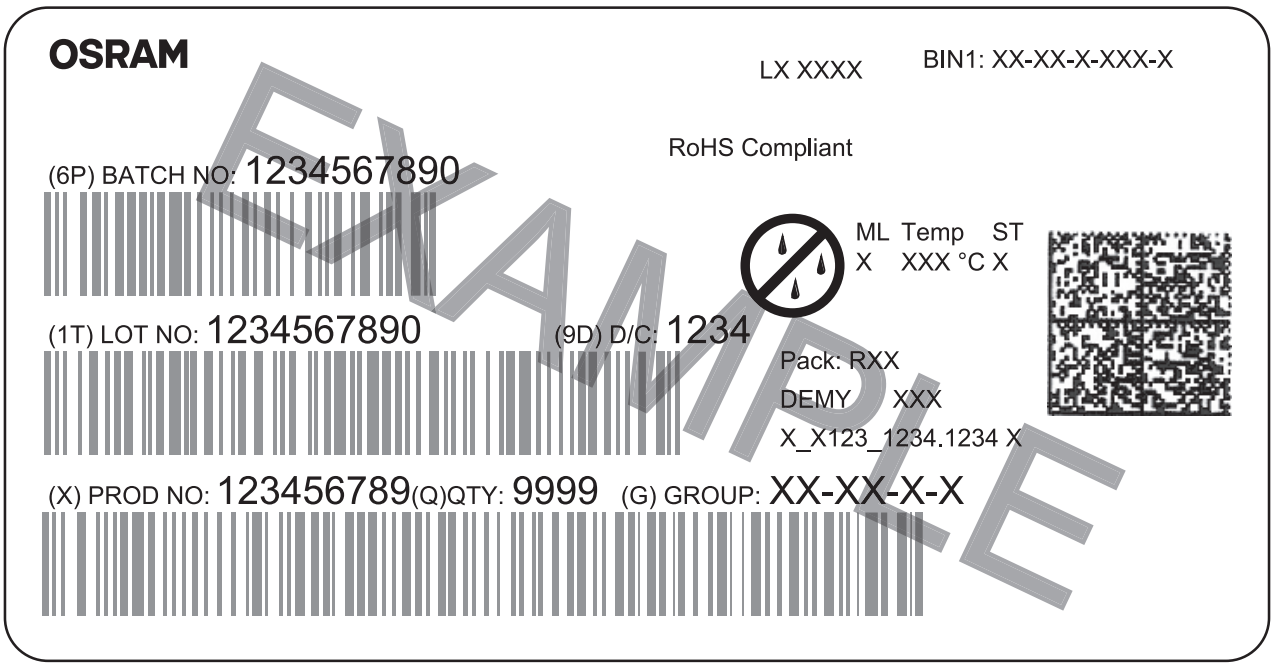

OHA04563

Dry Packing Process and Materials [9)]

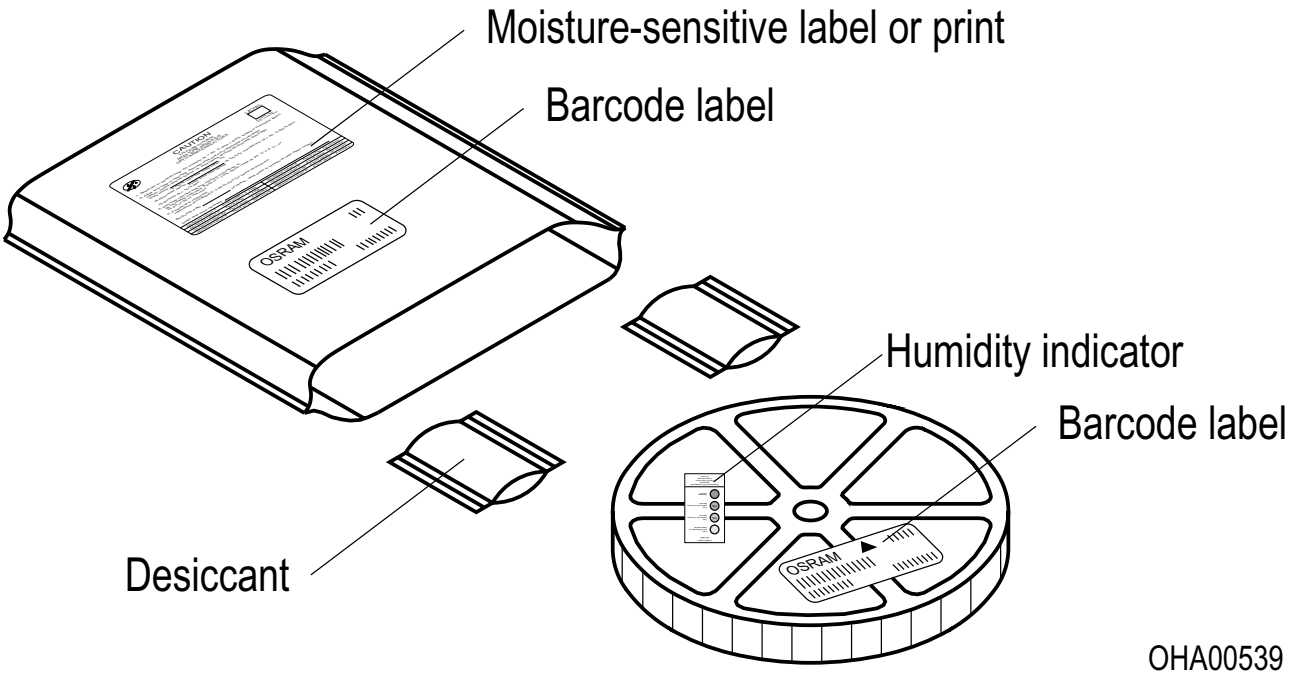

OHA00539

Moisture-sensitive product is packed in a dry bag containing desiccant and a humidity card according JEDEC-STD-033.

Notes

The evaluation of eye safety occurs according to the standard IEC 62471:2006 (photo biological safety of lamps and lamp systems). Within the risk grouping system of this IEC standard, the device specified in this data sheet fall into the class moderate risk (exposure time 0.25 s). Under real circumstances (for exposure time, conditions of the eye pupils, observation distance), it is assumed that no endangerment to the eye exists from these devices. As a matter of principle, however, it should be mentioned that intense light sources have a high secondary exposure potential due to their blinding effect. When looking at bright light sources (e.g. headlights), temporary reduction in visual acuity and afterimages can occur, leading to irritation, annoyance, visual impairment, and even accidents, depending on the situation.

Subcomponents of this device contain, in addition to other substances, metal filled materials including silver. Metal filled materials can be affected by environments that contain traces of aggressive substances. Therefore, we recommend that customers minimize device exposure to aggressive substances during storage, production, and use. Devices that showed visible discoloration when tested using the described tests above did show no performance deviations within failure limits during the stated test duration. Respective failure limits are described in the IEC60810.

This device is designed for specific/recommended applications only. Please consult OSRAM Opto Semiconductors Sales Staff in advance for detailed information on other non-recommended applications (e.g. automotive).

Change management for this component is aligned with the requirements of the lighting market.

For further application related information please visit https://ams-osram.com/support/application-notes

Disclaimer

Attention please!

The information describes the type of component and shall not be considered as assured characteristics. Terms of delivery and rights to change design reserved. Due to technical requirements components may contain dangerous substances.
For information on the types in question please contact our Sales Organization.
If printed or downloaded, please find the latest version on our website.

Packing

Please use the recycling operators known to you. We can also help you – get in touch with your nearest sales office. By agreement we will take packing material back, if it is sorted. You must bear the costs of transport. For packing material that is returned to us unsorted or which we are not obliged to accept, we shall have to invoice you for any costs incurred.

Product and functional safety devices/applications or medical devices/applications

Our components are not developed, constructed or tested for the application as safety relevant component or for the application in medical devices.
Our products are not qualified at module and system level for such application.

In case buyer – or customer supplied by buyer – considers using our components in product safety devices/ applications or medical devices/applications, buyer and/or customer has to inform our local sales partner immediately and we and buyer and /or customer will analyze and coordinate the customer-specific request between us and buyer and/or customer.

Glossary

1) **Brightness:** Brightness values are measured during a current pulse of typically 10 ms, with a tolerance of +/- 7%.

2) **Reverse Operation:** Not designed for reverse operation. Continuous reverse operation can cause migration and damage of the device.

3) **Forward Voltage:** The Forward voltage is measured during a current pulse duration of typically 1 ms with a tolerance of ± 0.05V .

4) **Color reproduction index:** Color reproduction index values (CRI-RA) are measured during a current pulse of typically 10 ms and with a tolerance of ±2.

5) **Chromaticity coordinate groups:** Chromaticity coordinate groups are measured during a current pulse duration of typically 10ms with a tolerance of ±0.005.

6) **Typical Values:** Due to the special conditions of the manufacturing processes of semiconductor devices, the typical data or calculated correlations of technical parameters can only reflect statistical figures. These do not necessarily correspond to the actual parameters of each single product, which could differ from the typical data and calculated correlations or the typical characteristic line. If requested, e.g. because of technical improvements, these typ. data will be changed without any further notice.

7) **Characteristic curve:** In the range where the line of the graph is broken, you must expect higher differences between single devices within one packing unit.

8) **Thermal Resistance:** Rth max is based on statistic values (6σ) used for Derating.

9) **Tolerance of Measure:** Unless otherwise noted in drawing, tolerances are specified with ±0.1 and dimensions are specified in mm.

10) **Tape and Reel:** All dimensions and tolerances are specified acc. IEC 60286-3 and specified in mm.

Revision History

Version	Date	Change
1.0	2025-12-22	Initial Version
1.1	2026-10-13	Features

EU RoHS and China RoHS compliant product
此产品符合欧盟 RoHS 指令的要求；
按照中国的相关法规和标准，
不含有毒有害物质或元素。

Published by ams-OSRAM AG
Tobelbader Strasse 30, 8141 Premstaetten, Austria
Phone +43 3136 500-0
ams-osram.com
© All rights reserved