OSRAM SFH 4250B

Datasheet

Published by ams-OSRAM AG
Tobelbader Strasse 30, 8141 Premstaetten, Austria
Phone +43 3136 500-0
ams-osram.com
© All rights reserved

Power TOPLED™

SFH 4250B

Infrared Emitter (850 nm)



PowerTOPLED is a powerful addition to the TOPLED family. Thanks to our extensive experience in SMT LED technology, we are able to offer high-quality, extremely robust products for all kinds of applications.
We will continue this successful path with the latest chip generation.



Applications

- Access control & security
- Authentication
- Eye, face and hand tracking
- Factory automation
- Home & building automation
- Medical lighting
- Rain light tunnel sensing

Features

- Package: clear epoxy
- Corrosion Robustness Class: 3B
- Qualifications: AEC-Q102 Qualified
- ESD: 2 kV acc. to ANSI/ESDA/JEDEC JS-001 (HBM, Class 2)
- High forward current allowed at high temperature
- Short switching times

Ordering Information

Type	Radiant intensity [1)2)] I_F = 100 mA; t_p = 20 ms I_e	Radiant intensity [1)] typ. I_F = 100 mA; t_p = 20 ms I_e	Ordering Code
SFH 4250B	22.4 ... 35.5 mW/sr	25 mW/sr	Q65113A9363

Maximum Ratings

T_S = 25 °C

Parameter	Symbol		Values
Operating temperature	T_{op}	min. max.	-40 °C 110 °C
Storage temperature	T_{stg}	min. max.	-40 °C 110 °C
Junction temperature	T_j	max.	125 °C
Forward current	I_F	min. max.	1 mA 100 mA
Forward current pulsed $t_p \leq 0.3$ ms; $D \leq 0.005$; T_S = 110°C	$I_{F\ pulse}$	max.	1 A
Reverse voltage [3)]	V_R	max.	5 V
ESD withstand voltage acc. to ANSI/ESDA/JEDEC JS-001 (HBM, Class 2)	V_{ESD}	max.	2 kV

Characteristics

I_F = 100 mA; t_p = 20 ms; T_S = 25 °C

Parameter	Symbol		Values
Peak wavelength	λ_{peak}	typ.	860 nm
Centroid wavelength	$\lambda_{centroid}$	typ.	850 nm
Spectral bandwidth at 50% $I_{rel,max}$ (FWHM)	$\Delta\lambda$	typ.	30 nm
Half angle	φ	typ.	60 °
Rise time (10% / 90%) I_F = 100 mA; R_L = 50 Ω	t_r	typ.	12 ns
Fall time (10% / 90%) I_F = 100 mA; R_L = 50 Ω	t_f	typ.	12 ns
Forward voltage [4]	V_F	typ. max.	1.45 V 1.75 V
Forward voltage I_F = 1 A; t_p = 100 µs	V_F	typ.	2.0 V
Reverse current [3] V_R = 5 V	I_R	typ. max.	0.01 µA 10 µA
Total radiant flux [5] I_F = 100 mA; t_p = 20 ms	Φ_e	typ.	76 mW
Thermal resistance junction solder point electrical [6] with efficiency η_e = 50 %	$R_{thJS\ elec.}$	typ. max.	21 K / W 25 K / W
Thermal resistance junction solder point real [6]	$R_{thJS\ real}$	typ. max.	41 K / W 50 K / W

Brightness Groups

Group	Radiant intensity [1)2)] I_F = 100 mA; t_p = 20 ms min. I_e	Radiant intensity [1)2)] I_F = 100 mA; t_p = 20 ms max. I_e
S2	22.4 mW/sr	28.0 mW/sr
T1	28.0 mW/sr	35.5 mW/sr

Only one group in one packing unit.

Relative Spectral Emission 7), 8)

$I_{e,rel} = f(\lambda)$; I_F = 100 mA; t_p = 20 ms

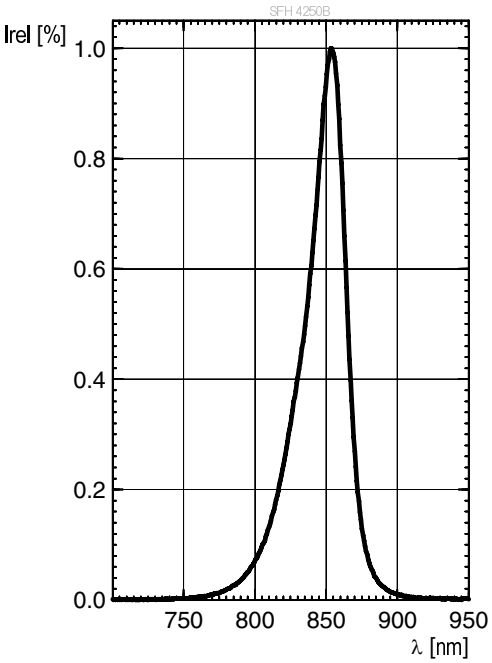

Radiation Characteristics 7), 8)

$I_{e,rel} = f(\varphi)$

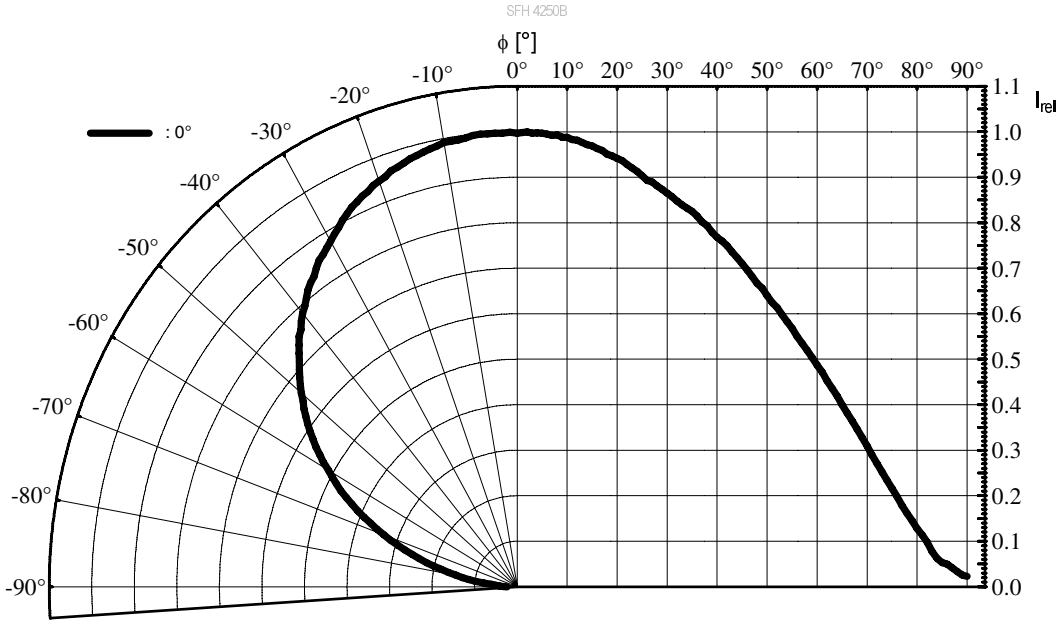

Forward current 7), 8)

$I_F = f(V_F)$; single pulse; $t_p = 100\ \mu s$

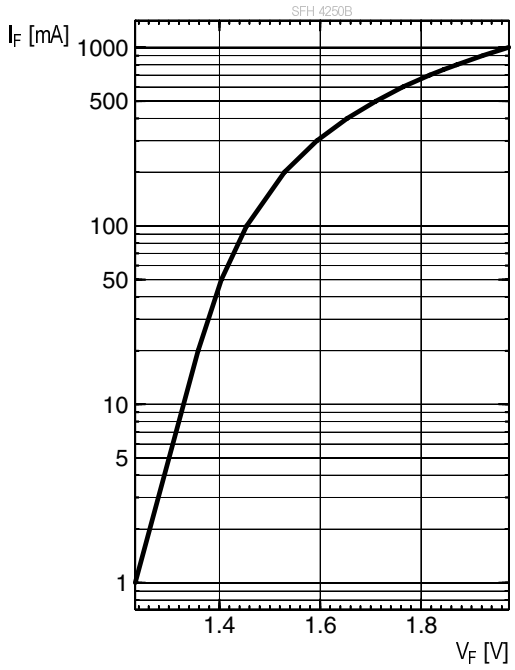

Relative Radiant Intensity 7), 8)

$I_e/I_e(100mA) = f(I_F)$; single pulse; $t_p = 100\ \mu s$

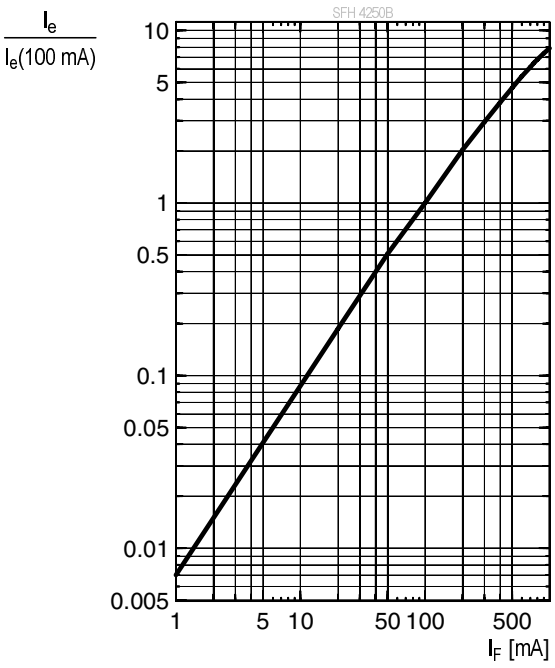

Relative Total Radiant Flux [7)]

$\Phi_{rel} = f(T_S)$; I_F = 100mA; t_p = 20ms; single pulse

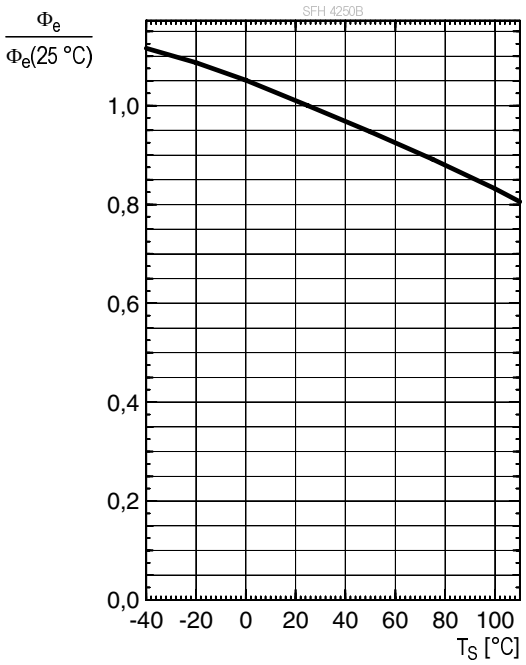

Forward Voltage [7)]

$V_F = f(T_S)$; I_F = 100mA; t_p = 20ms; single pulse

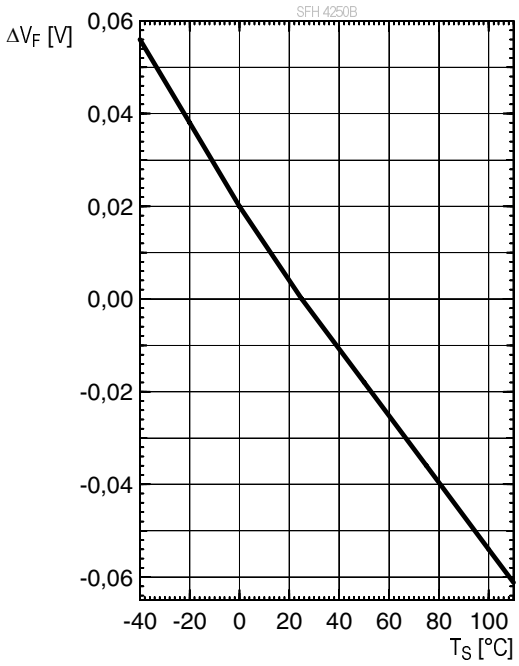

Centroid Wavelength [7)]

$\lambda_{centroid} = f(T_S)$; I_F = 100mA; t_p = 20ms; single pulse

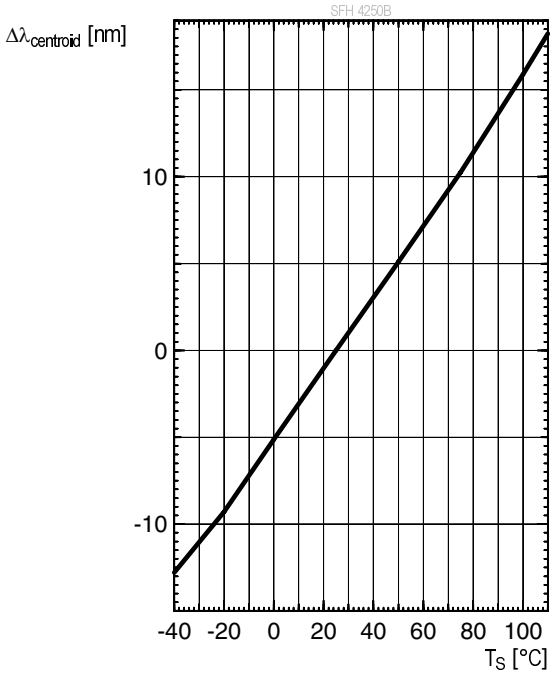

Max. Permissible Forward Current

$I_F = f(T_S)$; Rth_{js} = 50 K / W

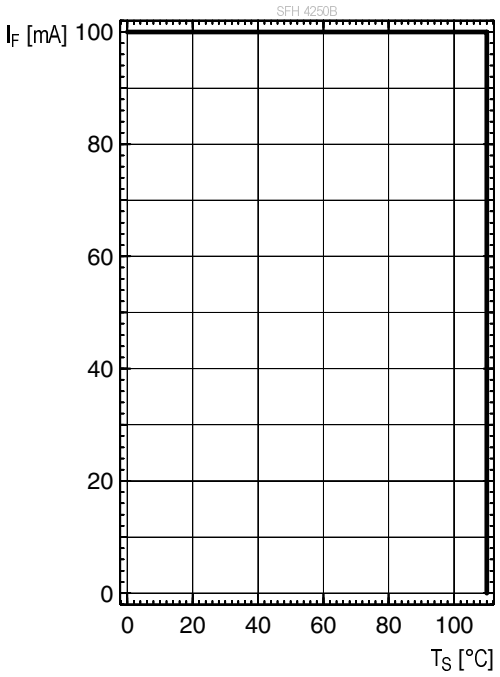

Permissible Pulse Handling Capability

$I_F = f(t_p)$; D = parameter; T_S = 85 °C

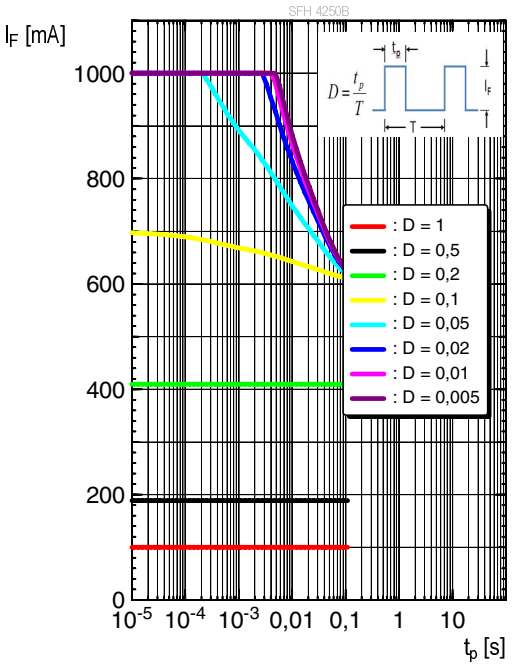

Permissible Pulse Handling Capability

$I_F = f(t_p)$; D = parameter; T_S = 110 °C

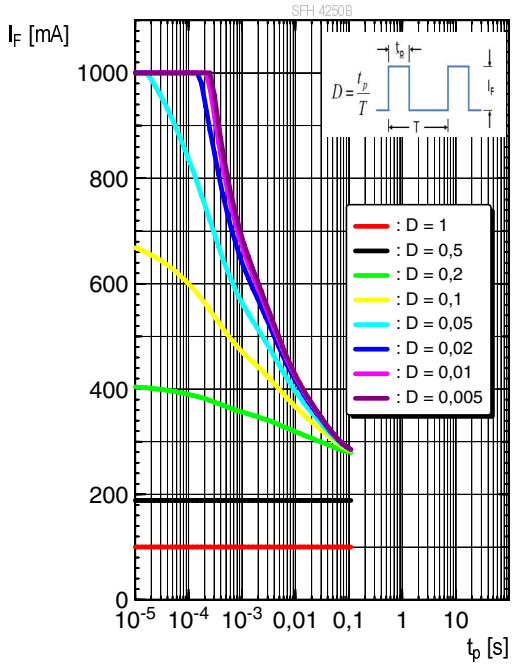

Dimensional Drawing [9)]

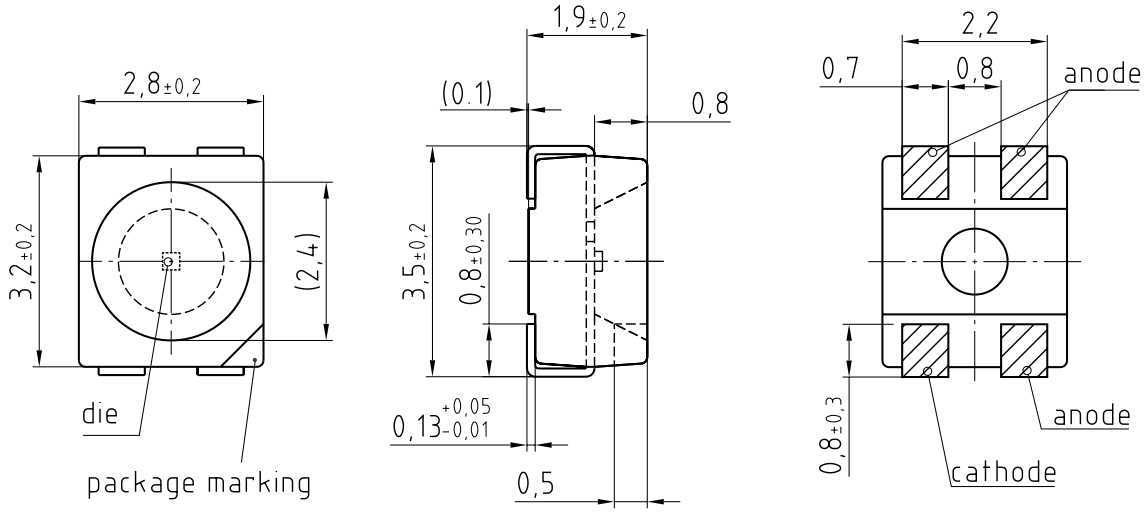

general tolerance ± 0.1
lead finish Sn

C63062-A3861-A6..-06

Further Information:

Approximate Weight: 31.0 mg

Package marking: Cathode

Corrosion test: Class: 3B
Test condition: 40°C / 90 % RH / 15 ppm H_2S / 14 days (stricter than IEC 60068-2-43)

Electrical Internal Circuit

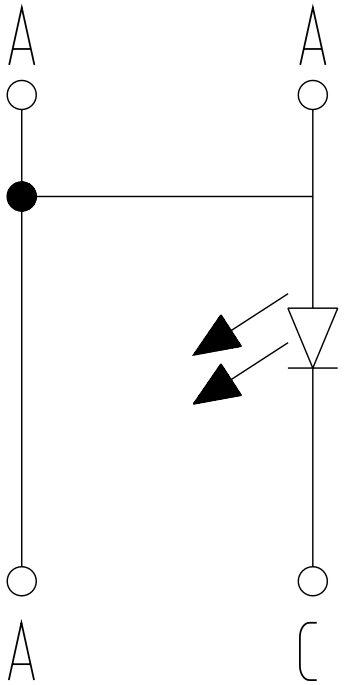

Pin	Description
1	Cathode
2	Anode
3	Anode
4	Anode

Recommended Solder Pad 9)

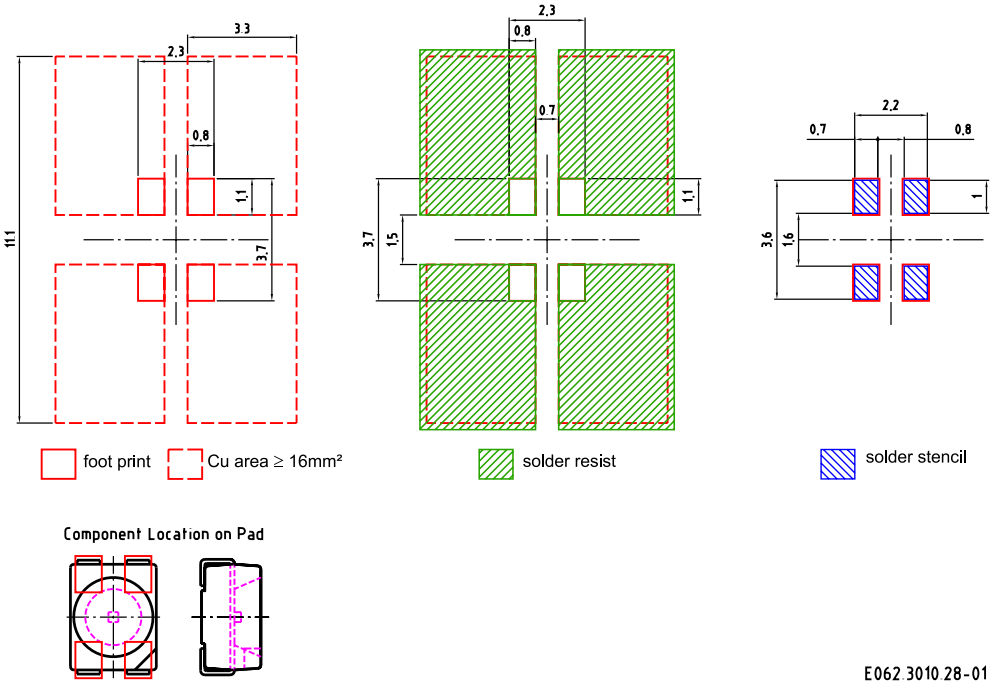

Reflow Soldering Profile

Product complies to MSL Level 2 acc. to JEDEC J-STD-020E

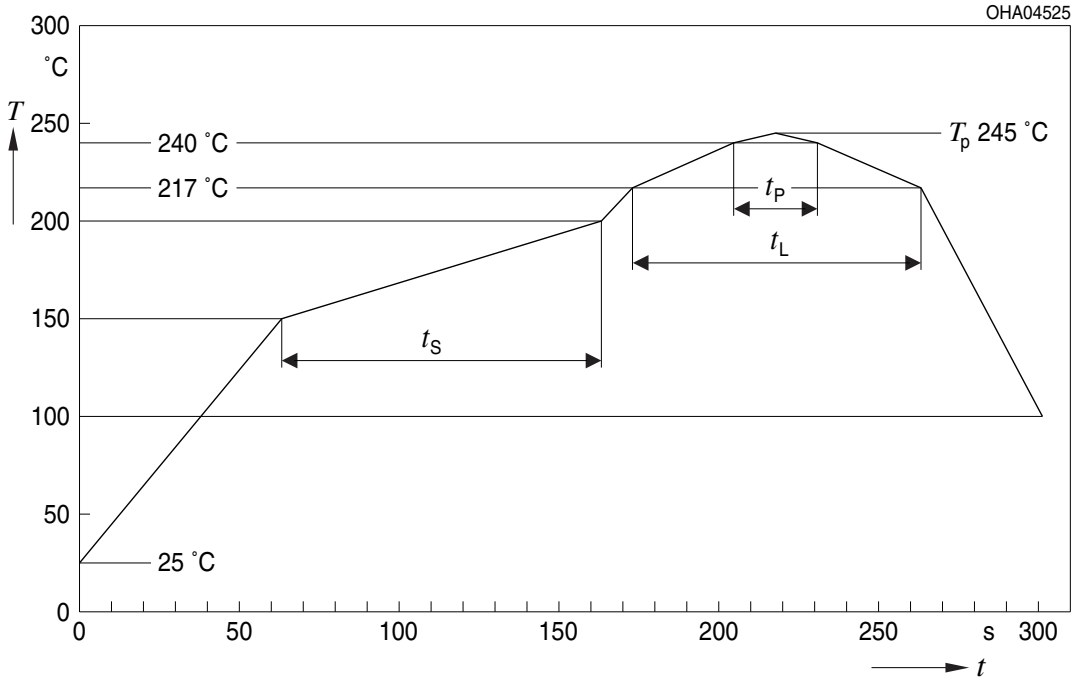

Profile Feature	Symbol	Pb-Free (SnAgCu) Assembly			Unit
		Minimum	Recommendation	Maximum	
Ramp-up rate to preheat*) 25 °C to 150 °C			2	3	K/s
Time t_S T_{Smin} to T_{Smax}	t_S	60	100	120	s
Ramp-up rate to peak*) T_{Smax} to T_P			2	3	K/s
Liquidus temperature	T_L		217		°C
Time above liquidus temperature	t_L		80	100	s
Peak temperature	T_P		245	260	°C
Time within 5 °C of the specified peak temperature T_P - 5 K	t_P	10	20	30	s
Ramp-down rate* T_P to 100 °C			3	6	K/s
Time 25 °C to T_P				480	s

All temperatures refer to the center of the package, measured on the top of the component
* slope calculation DT/Dt: Dt max. 5 s; fulfillment for the whole T-range

Taping [9)]

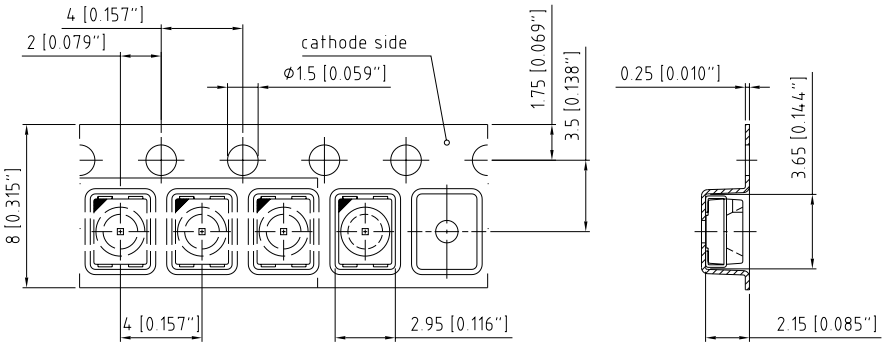
4 [0.157"]
2 [0.079"]
cathode side
Φ1.5 [0.059"]
1.75 [0.069"]
3.5 [0.138"]
0.25 [0.010"]
3.65 [0.144"]
8 [0.315"]
4 [0.157"]
2.95 [0.116"]
2.15 [0.085"]
C63062-A3721-B2 -02

Tape and Reel [10)]

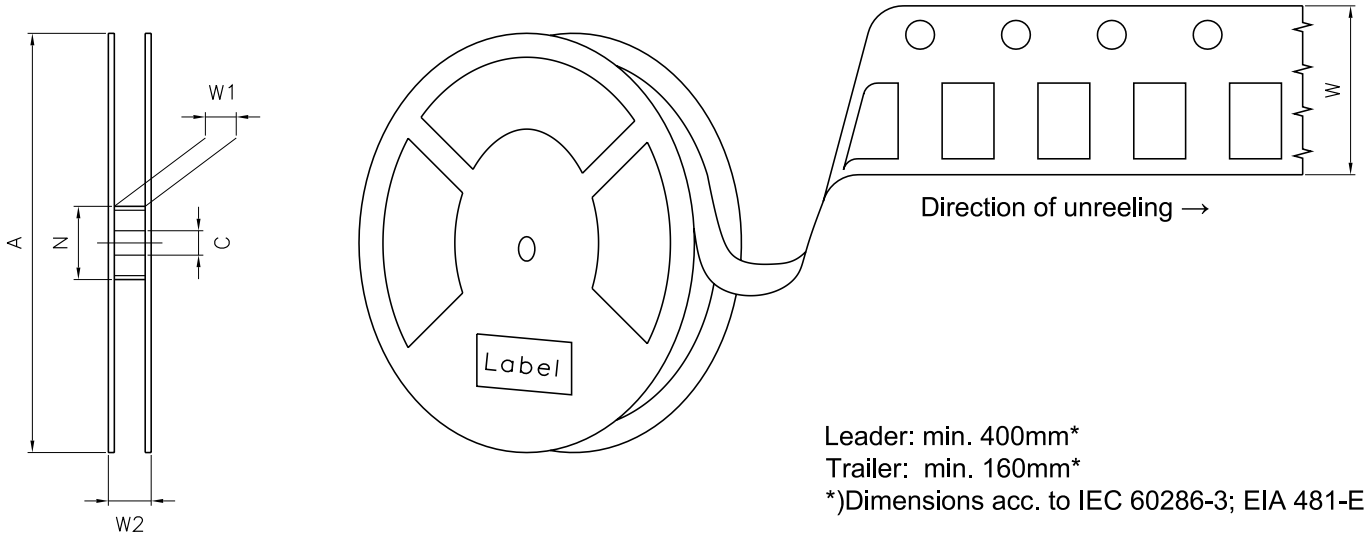

Leader: min. 400mm*
Trailer: min. 160mm*
*)Dimensions acc. to IEC 60286-3; EIA 481-E

Reel Dimensions

A	W	N_{min}	W_1	$W_{2\,max}$	Pieces per PU
180 mm	8 + 0.3 / - 0.1 mm	60 mm	8.4 + 2 mm	14.4 mm	2000

Barcode-Product-Label (BPL)

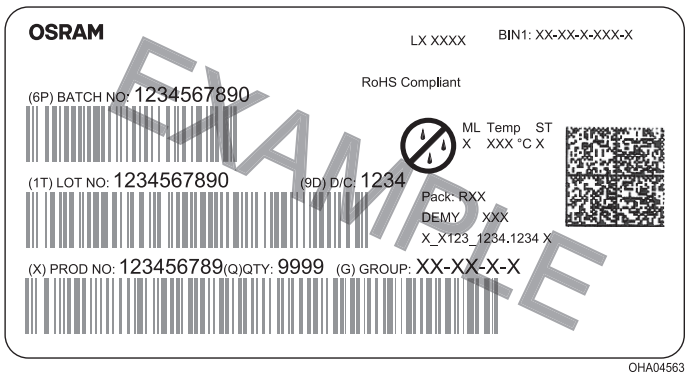

OHA04563

Dry Packing Process and Materials 9)

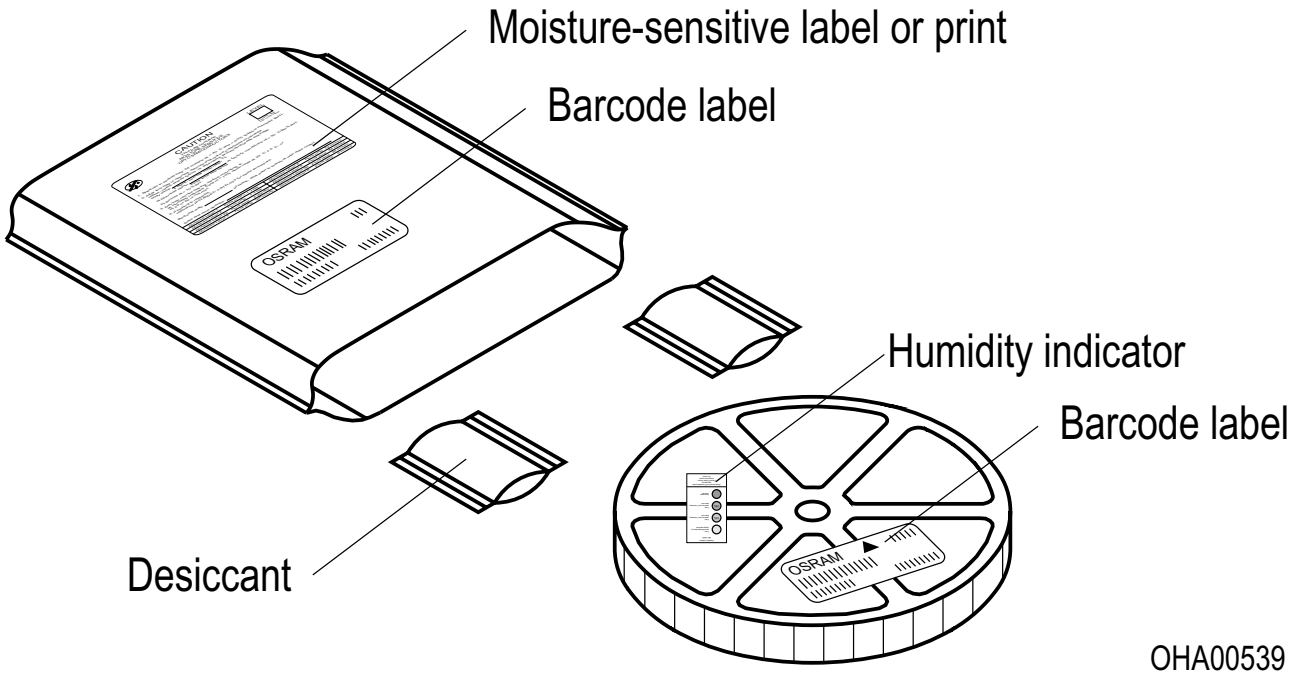

OHA00539

Moisture-sensitive product is packed in a dry bag containing desiccant and a humidity card according JEDEC-STD-033.

Notes

The evaluation of eye safety occurs according to the standard IEC 62471:2006 (photo biological safety of lamps and lamp systems). Within the risk grouping system of this IEC standard, the device specified in this data sheet falls into **exempt risk group - Exempt**.

Subcomponents of this device contain, in addition to other substances, metal filled materials including silver. Metal filled materials can be affected by environments that contain traces of aggressive substances. Therefore, we recommend that customers minimize device exposure to aggressive substances during storage, production, and use. Devices that showed visible discoloration when tested using the described tests above did show no performance deviations within failure limits during the stated test duration. Respective failure limits are described in the IEC60810.

For further application related information please visit https://ams-osram.com/support/application-notes

Disclaimer

Attention please!

The information describes the type of component and shall not be considered as assured characteristics.
Terms of delivery and rights to change design reserved. Due to technical requirements components may contain dangerous substances.
For information on the types in question please contact our Sales Organization.
If printed or downloaded, please find the latest version on our website.

Packing

Please use the recycling operators known to you. We can also help you – get in touch with your nearest sales office. By agreement we will take packing material back, if it is sorted. You must bear the costs of transport. For packing material that is returned to us unsorted or which we are not obliged to accept, we shall have to invoice you for any costs incurred.

Product and functional safety devices/applications or medical devices/applications

Our components are not developed, constructed or tested for the application as safety relevant component or for the application in medical devices.
Our products are not qualified at module and system level for such application.

In case buyer – or customer supplied by buyer – considers using our components in product safety devices/ applications or medical devices/applications, buyer and/or customer has to inform our local sales partner immediately and we and buyer and /or customer will analyze and coordinate the customer-specific request between us and buyer and/or customer.

Glossary

1) **Radiant intensity:** Measured at a solid angle of Ω = 0.01 sr

2) **Brightness:** The brightness values are measured with a tolerance of ±11%.

3) **Reverse Operation:** This product is intended to be operated applying a forward current within the specified range. Applying any continuous reverse bias or forward bias below the voltage range of light emission shall be avoided because it may cause migration which can change the electro-optical characteristics or damage the LED.

4) **Forward Voltage:** The forward voltages are measured with a tolerance of ±0.1 V.

5) **Total radiant flux:** Measured with integrating sphere.

6) **Thermal resistance:** junction - soldering point, of the device only, mounted on an ideal heatsink (e.g. metal block)

7) **Typical Values:** Due to the special conditions of the manufacturing processes of semiconductor devices, the typical data or calculated correlations of technical parameters can only reflect statistical figures. These do not necessarily correspond to the actual parameters of each single product, which could differ from the typical data and calculated correlations or the typical characteristic line. If requested, e.g. because of technical improvements, these typ. data will be changed without any further notice.

8) **Testing temperature:** TA = 25°C (unless otherwise specified)

9) **Tolerance of Measure:** Unless otherwise noted in drawing, tolerances are specified with ±0.1 and dimensions are specified in mm.

10) **Tape and Reel:** All dimensions and tolerances are specified acc. IEC 60286-3 and specified in mm.

Revision History

Version	Date	Change
1.0	2025-07-07	Initial Version
1.1	2025-08-11	Description Characteristics Electro - Optical Characteristics (Diagrams) Derating (Diagrams)
1.2	2025-08-19	Derating (Diagrams) Electro - Optical Characteristics (Diagrams)
1.3	2025-11-28	Derating (Diagrams)
1.4	2026-11-17	Characteristics Dimensional Drawing Electrical Internal Circuit

EU RoHS and China RoHS compliant product
此产品符合欧盟 RoHS 指令的要求；
按照中国的相关法规和标准，
不含有毒有害物质或元素。

Published by ams-OSRAM AG
Tobelbader Strasse 30, 8141 Premstaetten, Austria
Phone +43 3136 500-0
ams-osram.com
© All rights reserved