OSRAM LR P47F

Datasheet

Discontinued

Published by ams-OSRAM AG
Tobelbader Strasse 30, 8141 Premstaetten, Austria
Phone +43 3136 500-0
ams-osram.com
© All rights reserved

PointLED™

LR P47F

With a diameter of just 2 mm, the PointLED is one of the smallest packages in its class and achieves high luminous efficacies. Due to its round and flat package, measuring only 0.775 mm high, it is ideal for application where space is a sensitive issue.

Applications

- Access control & security
- Appliances & tools
- Display backlighting
- Factory automation
- Home & building automation
- Material processing
- Projection & display
- Robotics

Features

- Package: white SMT package, colorless clear resin
- Chip technology: Thinfilm
- Typ. Radiation: 120° (Lambertian emitter)
- Color: λ_{dom} = 625 nm (● red)
- Corrosion Robustness Class: 3B
- Qualifications: AEC-Q102 Qualified
- ESD: 2 kV acc. to ANSI/ESDA/JEDEC JS-001 (HBM, Class 2)

Discontinued

Ordering Information

Type	Mounting methode	Luminous Intensity [1)] I_F = 30 mA I_v	Ordering Code
LR P47F-U2AB-1-3A5A	Reverse	560 ... 1800 mcd	Q65111A8219
LR P47F-U2AB-1-3A5A-F	Top	560 ... 1800 mcd	Q65111A8218

Discontinued

Maximum Ratings

Parameter	Symbol		Values
Operating Temperature	T_{op}	min. max.	-40 °C 100 °C
Storage Temperature	T_{stg}	min. max.	-40 °C 100 °C
Junction Temperature	T_j	max.	125 °C
Forward current T_S = 25 °C	I_F	max.	50 mA
Surge current t ≤ 10 µs; D = 0.1 ; T_S = 25 °C	I_{FS}	max.	100 mA
Reverse voltage [2)] T_S = 25 °C	V_R	max.	12 V
ESD withstand voltage acc. to ANSI/ESDA/JEDEC JS-001 (HBM, Class 2)	V_{ESD}		2 kV

Discontinued

Characteristics

I_F = 30 mA; T_S = 25 °C

Parameter	Symbol		Values
Peak Wavelength	λ_{peak}	typ.	634 nm
Dominant Wavelength [3] I_F = 30 mA	λ_{dom}	min. typ. max.	620 nm 625 nm 630 nm
Spectral Bandwidth at 50% $I_{rel,max}$	$\Delta\lambda$	typ.	16 nm
Viewing angle at 50% I_V	2φ	typ.	120 °
Forward Voltage [4] I_F = 30 mA	V_F	min. typ. max.	1.80 V 2.20 V 2.55 V
Reverse current [2] V_R = 12 V	I_R	typ. max.	0.01 µA 10 µA
Temperature Coefficient of Peak Wavelength -10°C ≤ T ≤ 100°C	$TC_{\lambda peak}$	typ.	0.14 nm / K
Temperature Coefficient of Dominant Wavelength -10°C ≤ T ≤ 100°C	$TC_{\lambda dom}$	typ.	0.07 nm / K
Real thermal resistance junction/solderpoint [5]	$R_{thJS\ real}$	max.	200 K / W

Discontinued

Brightness Groups

Group	Luminous Intensity [1] I_F = 30 mA min. I_v	Luminous Intensity. [1] I_F = 30 mA max. I_v	Luminous Flux [6] I_F = 30 mA typ. Φ_V
U2	560 mcd	710 mcd	1910 mlm
V1	710 mcd	900 mcd	2420 mlm
V2	900 mcd	1120 mcd	3030 mlm
AA	1120 mcd	1400 mcd	3780 mlm
AB	1400 mcd	1800 mcd	4800 mlm

Forward Voltage Groups

Group	Forward Voltage [4] I_F = 30 mA min. V_F	Forward Voltage [4] I_F = 30 mA max. V_F
3A	1.80 V	1.95 V
3B	1.95 V	2.10 V
4A	2.10 V	2.25 V
4B	2.25 V	2.40 V
5A	2.40 V	2.55 V

Discontinued

Group Name on Label

Example: AA-1-3A

Brightness	Wavelength	Forward Voltage
AA	1	3A

Discontinued

Relative Spectral Emission [6)]

$I_{rel} = f(\lambda)$; $I_F = 30$ mA; $T_S = 25$ °C

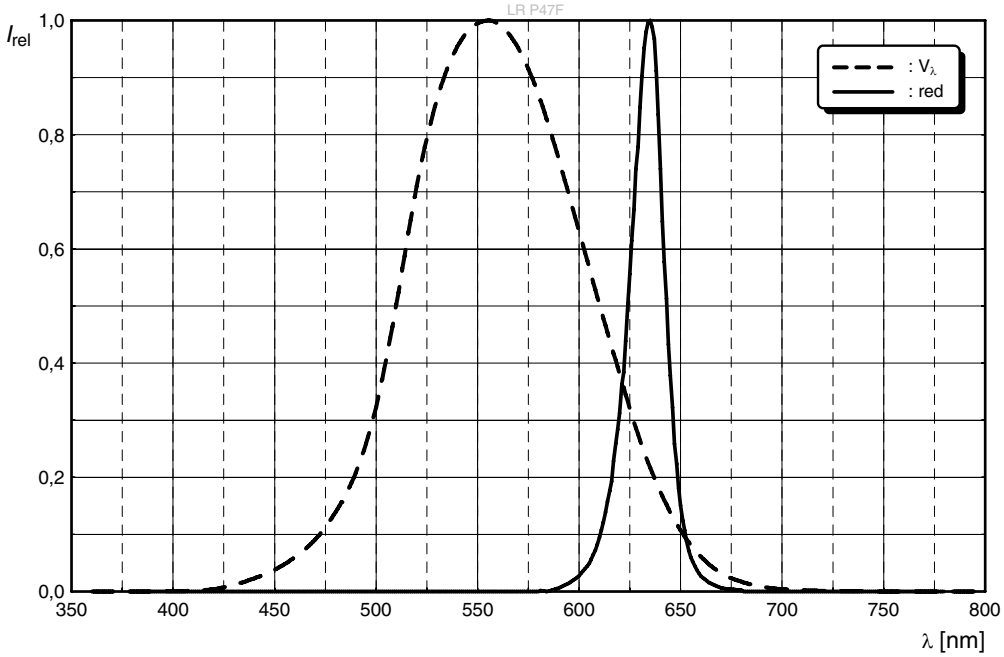

Radiation Characteristics [6)]

$I_{rel} = f(\phi)$; $T_S = 25$ °C

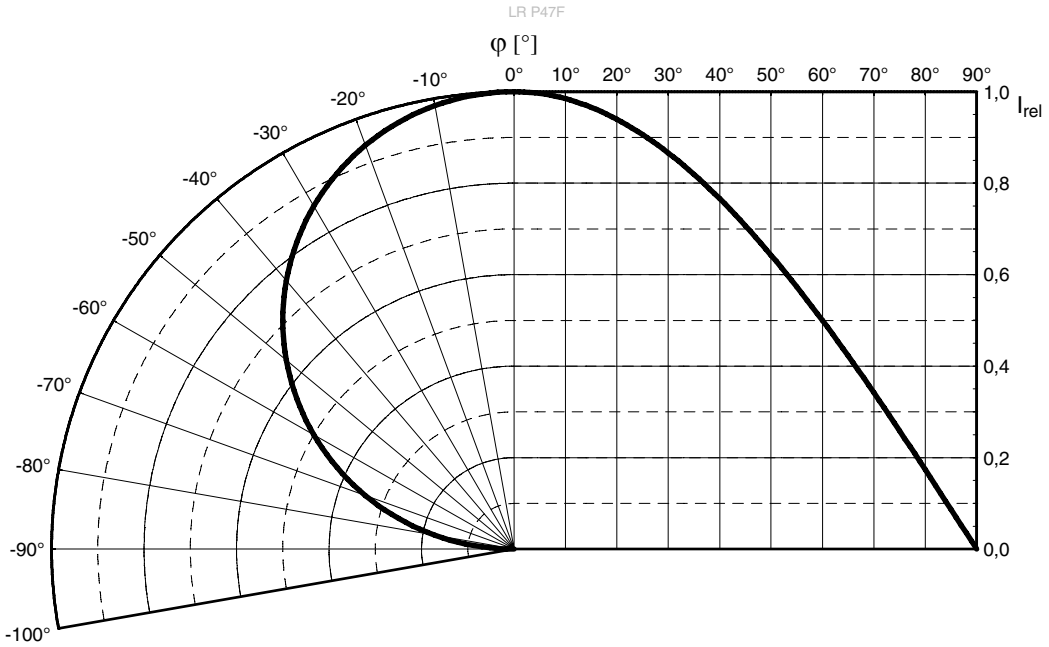

Discontinued

Forward current [6], [7]

$I_F = f(V_F)$; $T_S = 25\ °C$

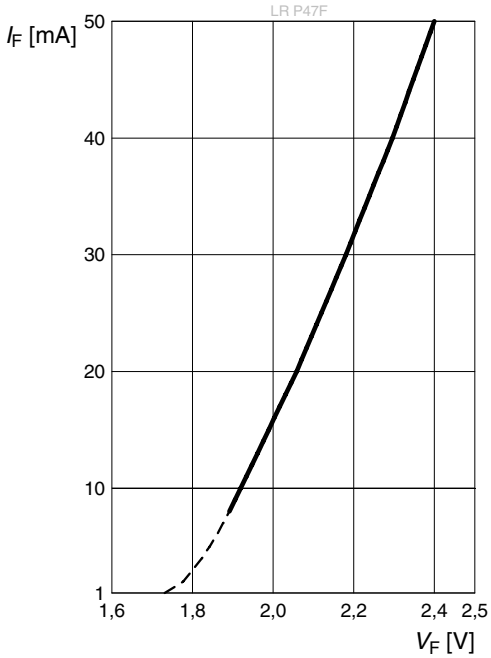

Relative Luminous Intensity [6], [7]

$I_v/I_v(30\ mA) = f(I_F)$; $T_S = 25\ °C$

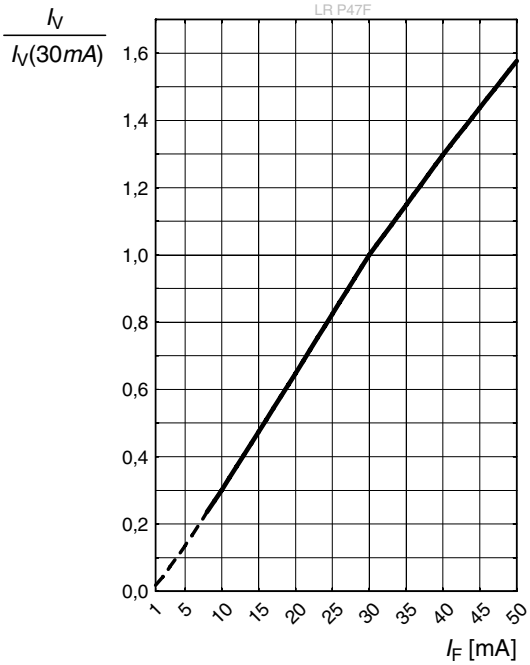

Dominant Wavelength [6]

$\Delta\lambda_{dom} = f(I_F)$; $T_S = 25\ °C$

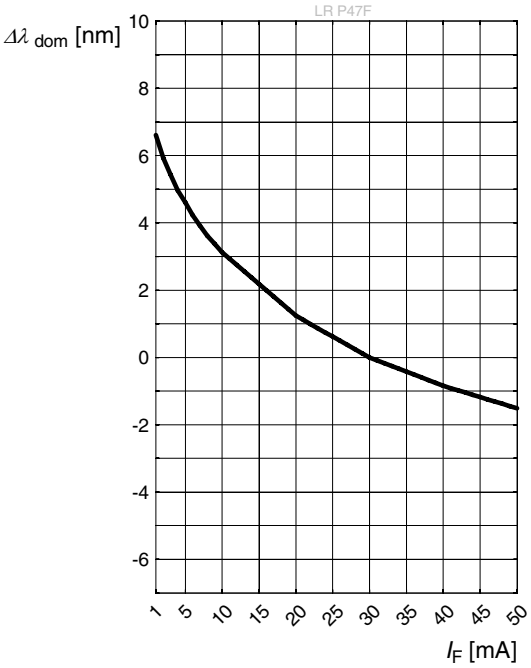

Discontinued

Forward Voltage [6)]

$\Delta V_F = V_F - V_F(25\ °C) = f(T_j)$; $I_F = 30$ mA

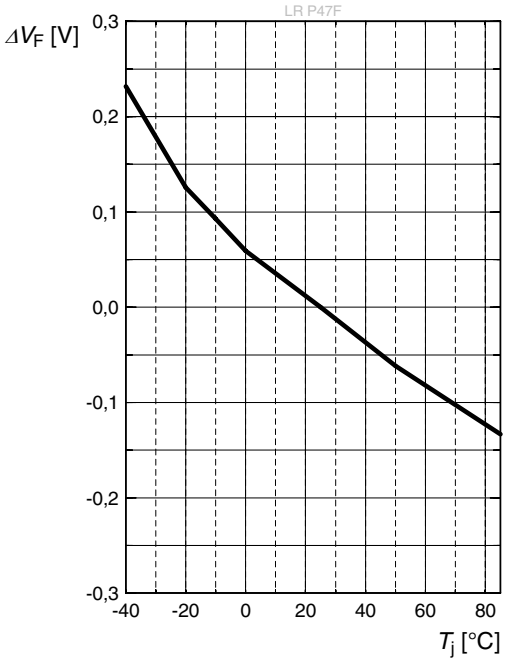

Relative Luminous Intensity [6)]

$I_v/I_v(25\ °C) = f(T_j)$; $I_F = 30$ mA

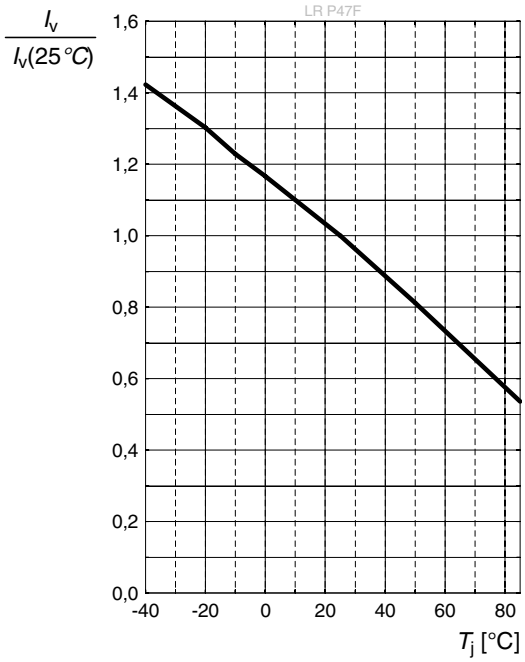

Discontinued

Max. Permissible Forward Current [5)]

$I_F = f(T)$

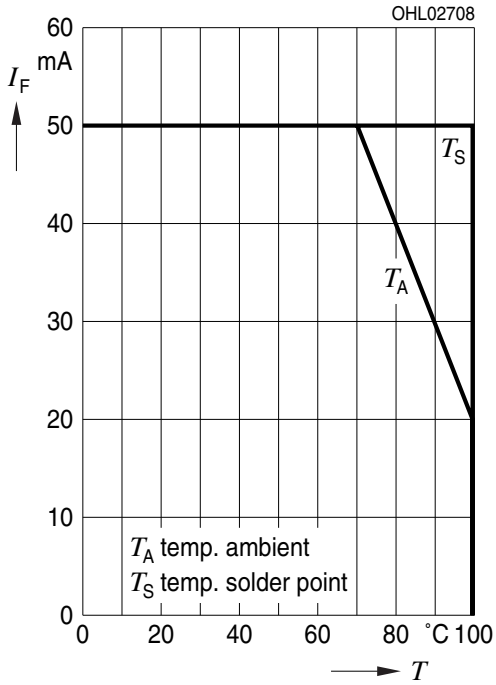

Permissible Pulse Handling Capability

$I_F = f(t_p)$; D: Duty cycle; T_S = 25 °C

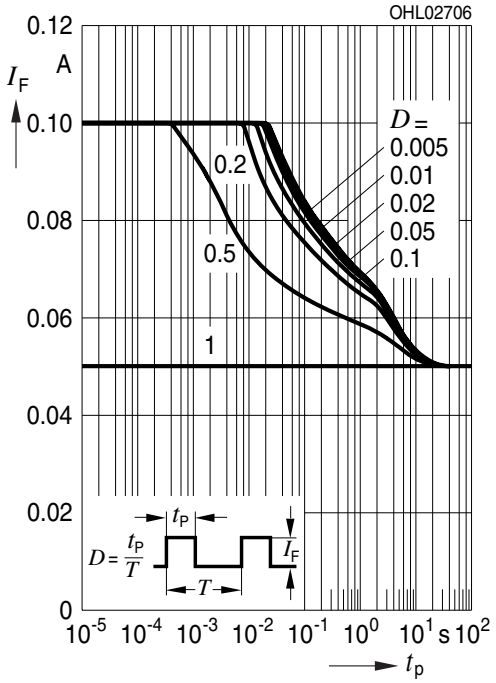

Permissible Pulse Handling Capability

$I_F = f(t_p)$; D: Duty cycle; T_S = 85 °C

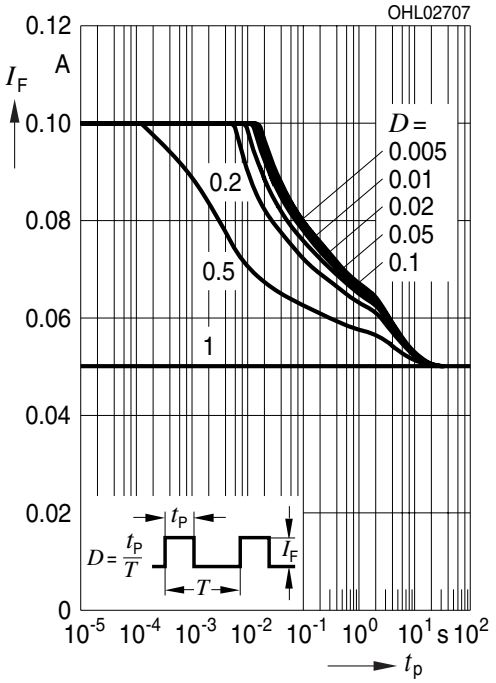

Discontinued

Dimensional Drawing [8)]

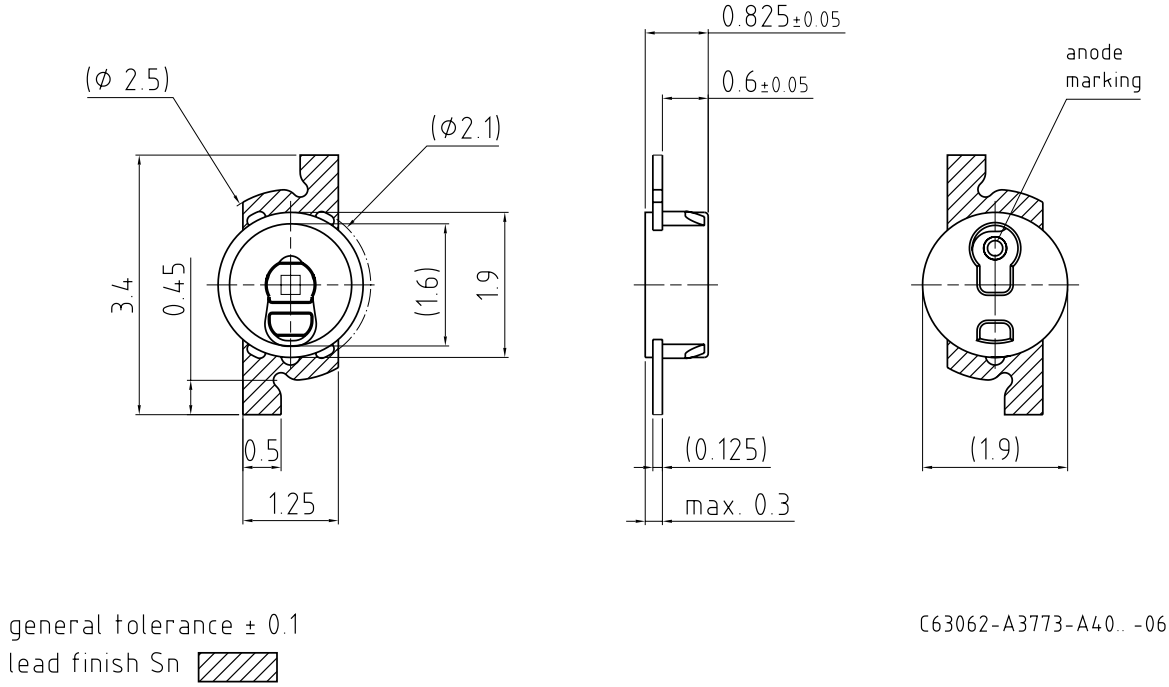

Further Information:

Approximate Weight: 6.0 mg

Corrosion test: Class: 3B
Test condition: 40°C / 90 % RH / 15 ppm H_2S / 14 days (stricter than IEC 60068-2-43)

Discontinued

Recommended Solder Pad [8)]

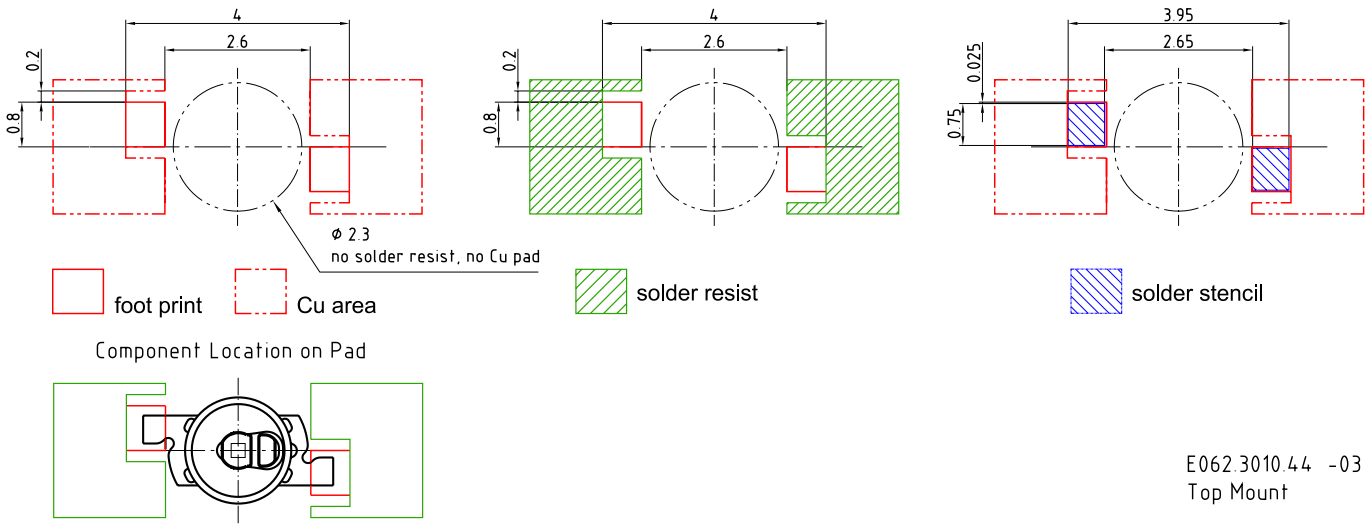

Recommended Solder Pad [8)]

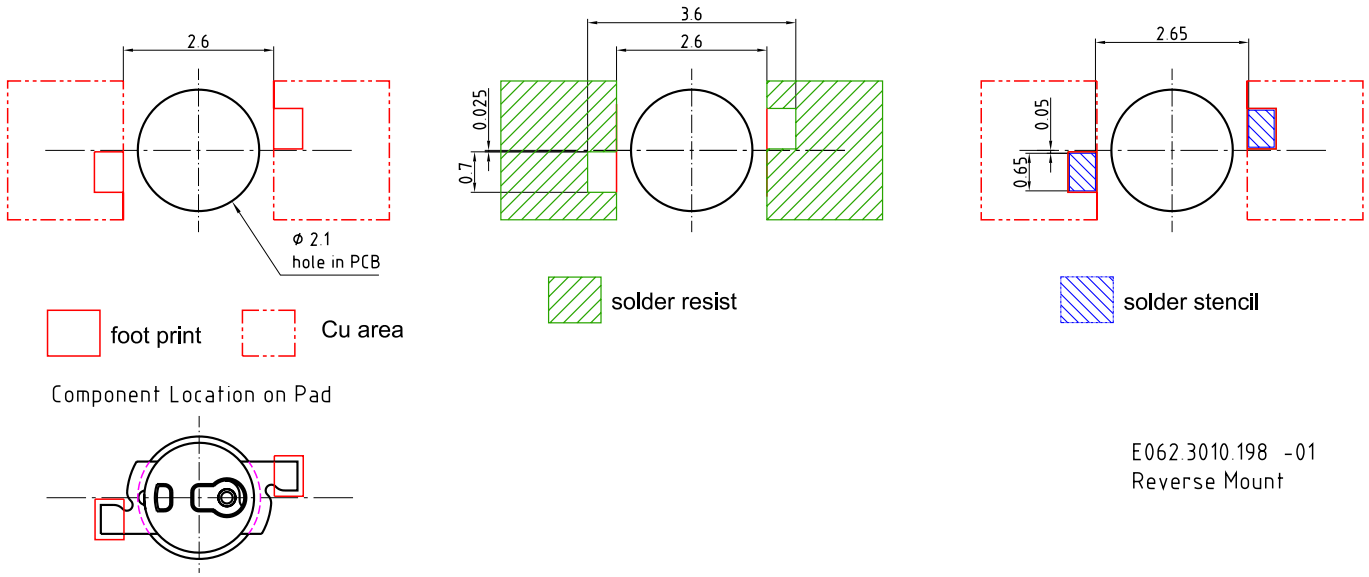

For superior solder joint connectivity results we recommend soldering under standard nitrogen atmosphere. Package not suitable for ultra sonic cleaning.

Discontinued

Reflow Soldering Profile

Product complies to MSL Level 2 acc. to JEDEC J-STD-020E

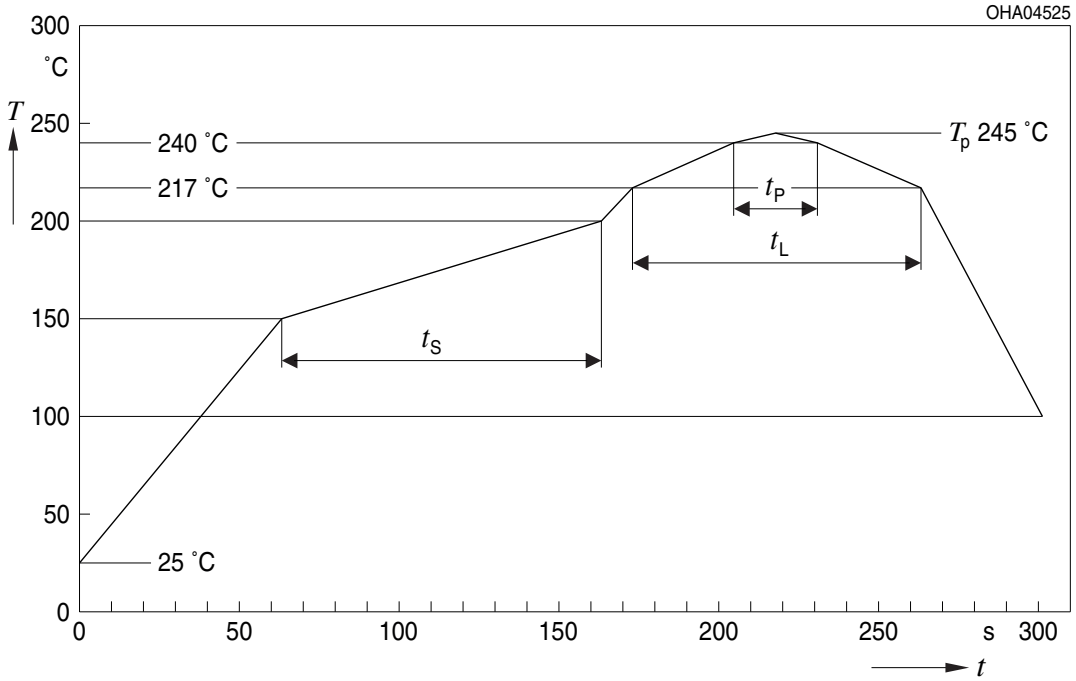

Profile Feature	Symbol	Pb-Free (SnAgCu) Assembly			Unit
		Minimum	Recommendation	Maximum	
Ramp-up rate to preheat*) 25 °C to 150 °C			2	3	K/s
Time t_S T_{Smin} to T_{Smax}	t_S	60	100	120	s
Ramp-up rate to peak*) T_{Smax} to T_P			2	3	K/s
Liquidus temperature	T_L		217		°C
Time above liquidus temperature	t_L		80	100	s
Peak temperature	T_P		245	260	°C
Time within 5 °C of the specified peak temperature T_P - 5 K	t_P	10	20	30	s
Ramp-down rate* T_P to 100 °C			3	6	K/s
Time 25 °C to T_P				480	s

All temperatures refer to the center of the package, measured on the top of the component
* slope calculation DT/Dt: Dt max. 5 s; fulfillment for the whole T-range

Discontinued

Taping [8)]

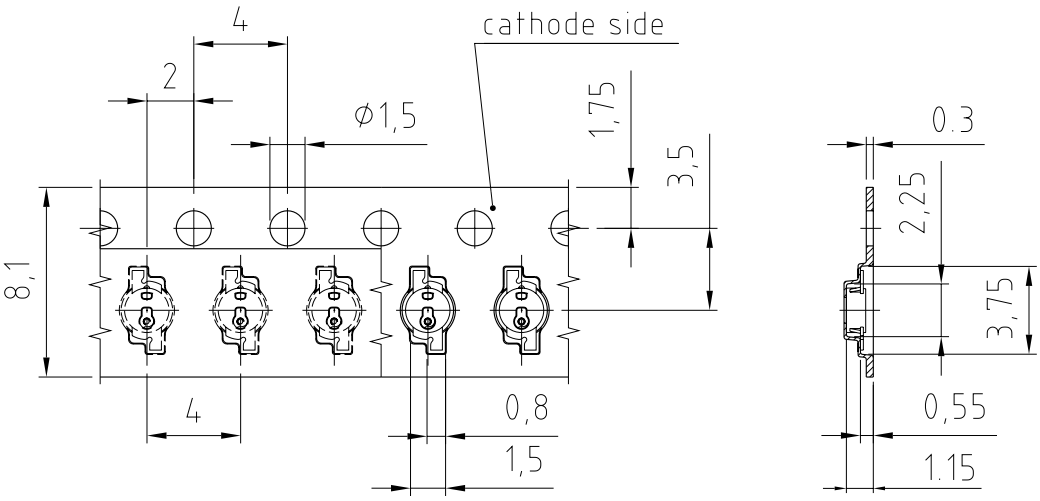

C63062-A3773-B14 -04
Reverse Mount

Taping [8)]

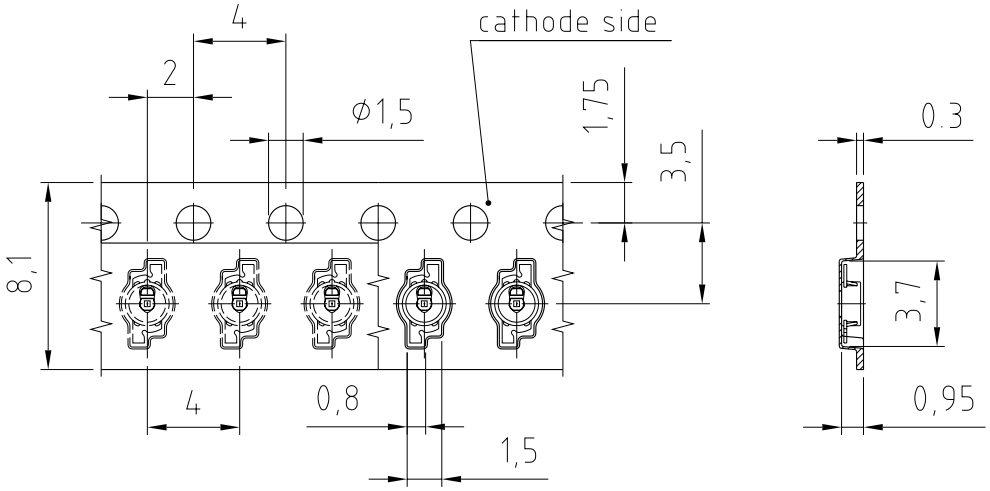

C63062-A3773-B16 -04
Top Mount

Discontinued

Tape and Reel [9)]

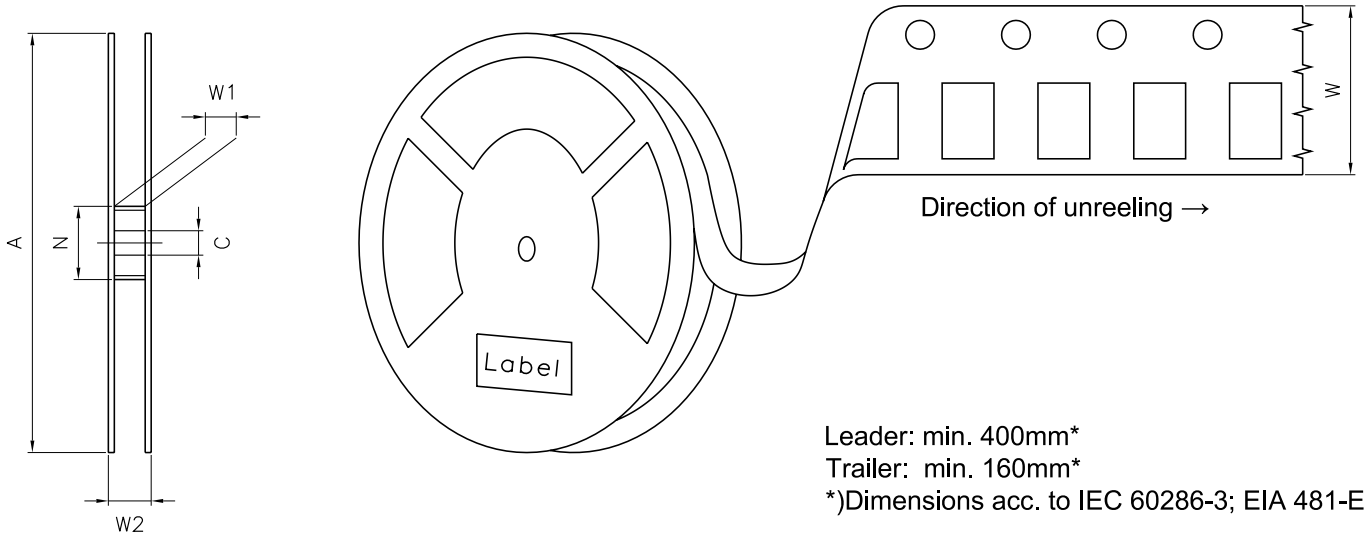

Leader: min. 400mm*
Trailer: min. 160mm*
*)Dimensions acc. to IEC 60286-3; EIA 481-E

Reel Dimensions

A	W	N_{min}	W_1	$W_{2\,max}$	Pieces per PU
180 mm	8 + 0.3 / - 0.1 mm	60 mm	8.4 + 2 mm	14.4 mm	3000
330 mm	8 + 0.3 / - 0.1 mm	60 mm	8.4 + 2 mm	14.4 mm	12000

Discontinued

Barcode-Product-Label (BPL)

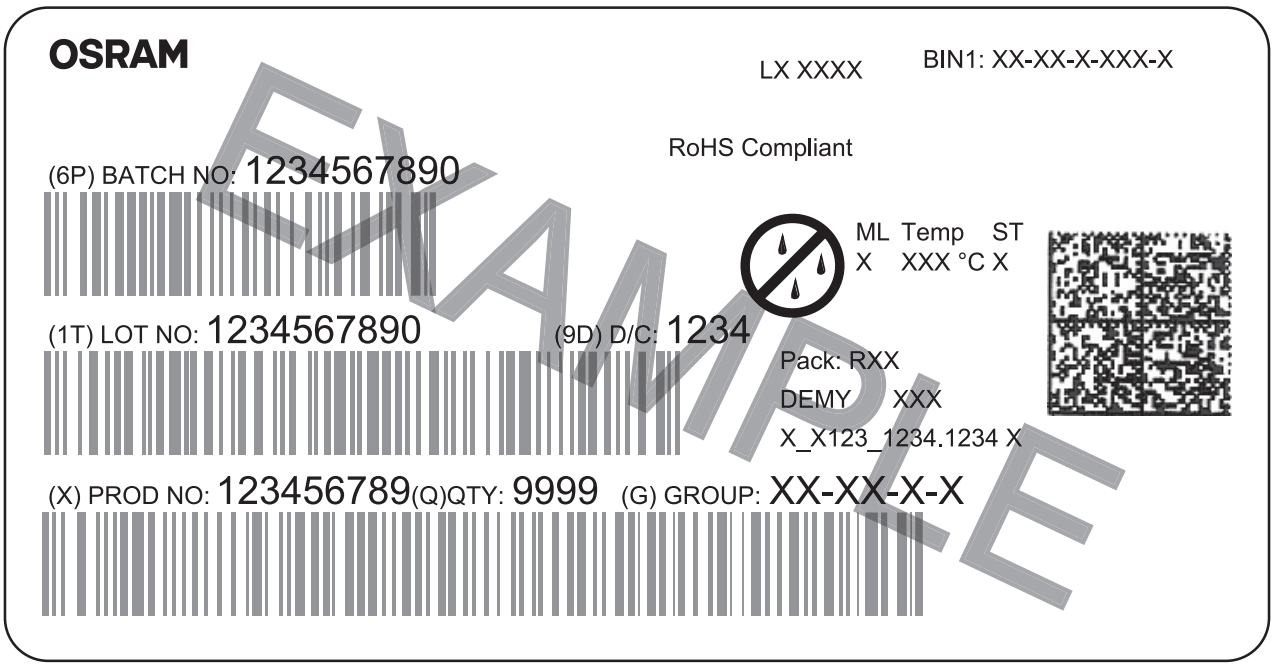

OHA04563

Dry Packing Process and Materials [8)]

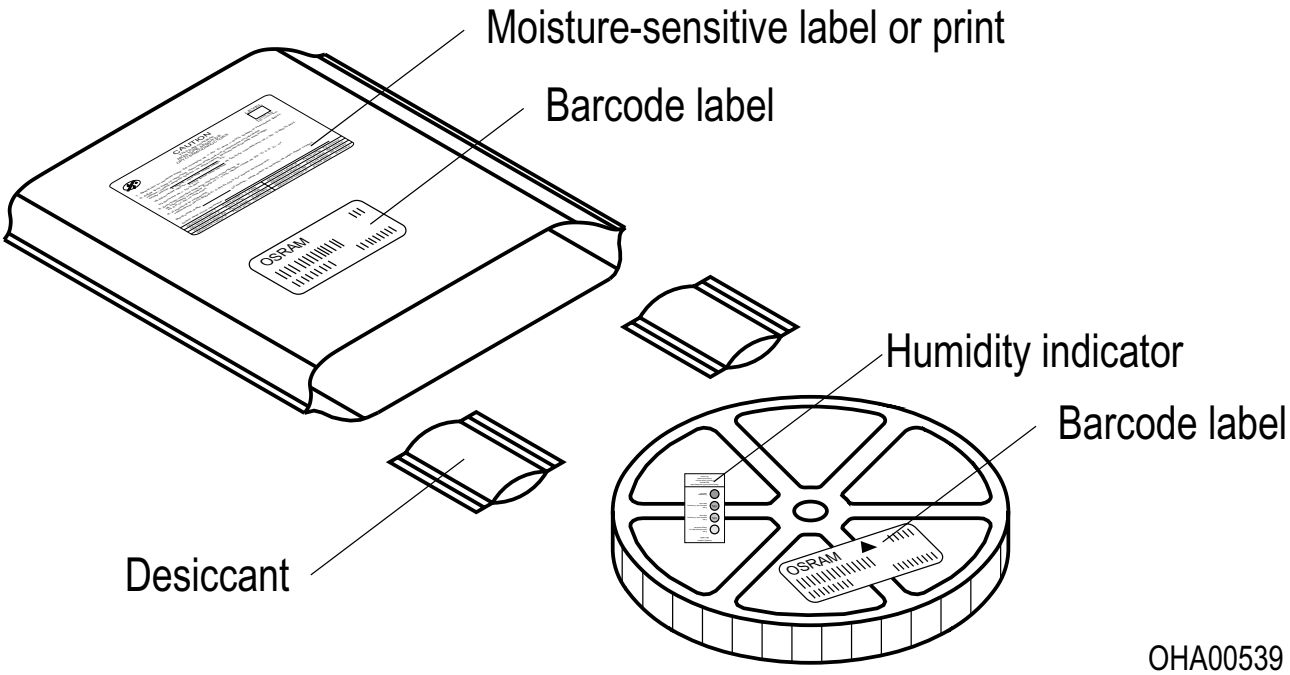

OHA00539

Moisture-sensitive product is packed in a dry bag containing desiccant and a humidity card according JEDEC-STD-033.

Discontinued

Type Designation System

Wavelength (λ_{dom} typ.)

A:	617 nm	amber
S:	633 nm	super red
T:	528 nm	true green
Y:	587 nm	yellow
O:	606 nm	orange
G:	570 nm	green
P:	560 nm	pure green
R:	625 nm	red
B:	470 nm	blue
H:	645 nm	hyper-red
V:	505 nm	verde green

Color coordinates according CIE 1931/Emission color:

W: white
UW: ultra white
CB: color on demand blue
CG: color on demand green
CL: color on demand lagune

L: Light emitting diode

Package Type
P: POINTLED

L	A		P	4	7	6

Lead / Package Properties
4: through hole
W: folded leads and UX:3, Ag-LF, w/o TO2 jetting

Encapsulant Type / Lens Properties
7: Colorless clear or white volume conversion (resin encapsulation)
S: Silicone (with or without diffuser)

Chip Technology:
1: TSN
3: standard InGaN
4: AlGaAs
5: HOP 2000
6: Standard InGaIP
9: TSN low current
B: HOP 2000
C: ATON
D: Small ThinGaN/ Thinfilm (e.g. 6mil)
F: Thinfilm InGaAlP
G: ThinGaN(Thinfilm InGaN)
K: InGaAlP low current
S: standard InGaN low current
0: TSN

Discontinued

Notes

The evaluation of eye safety occurs according to the standard IEC 62471:2006 (photo biological safety of lamps and lamp systems). Within the risk grouping system of this IEC standard, the device specified in this data sheet fall into the class **exempt group (exposure time 10000 s)**. Under real circumstances (for exposure time, conditions of the eye pupils, observation distance), it is assumed that no endangerment to the eye exists from these devices. As a matter of principle, however, it should be mentioned that intense light sources have a high secondary exposure potential due to their blinding effect. When looking at bright light sources (e.g. headlights), temporary reduction in visual acuity and afterimages can occur, leading to irritation, annoyance, visual impairment, and even accidents, depending on the situation.

Subcomponents of this device contain, in addition to other substances, metal filled materials including silver. Metal filled materials can be affected by environments that contain traces of aggressive substances. Therefore, we recommend that customers minimize device exposure to aggressive substances during storage, production, and use. Devices that showed visible discoloration when tested using the described tests above did show no performance deviations within failure limits during the stated test duration. Respective failure limits are described in the IEC60810.

For further application related information please visit https://ams-osram.com/support/application-notes

Discontinued

Disclaimer

Attention please!

The information describes the type of component and shall not be considered as assured characteristics. Terms of delivery and rights to change design reserved. Due to technical requirements components may contain dangerous substances.
For information on the types in question please contact our Sales Organization.
If printed or downloaded, please find the latest version on our website.

Packing

Please use the recycling operators known to you. We can also help you – get in touch with your nearest sales office. By agreement we will take packing material back, if it is sorted. You must bear the costs of transport. For packing material that is returned to us unsorted or which we are not obliged to accept, we shall have to invoice you for any costs incurred.

Product and functional safety devices/applications or medical devices/applications

Our components are not developed, constructed or tested for the application as safety relevant component or for the application in medical devices.
Our products are not qualified at module and system level for such application.

In case buyer – or customer supplied by buyer – considers using our components in product safety devices/ applications or medical devices/applications, buyer and/or customer has to inform our local sales partner immediately and we and buyer and /or customer will analyze and coordinate the customer-specific request between us and buyer and/or customer.

Discontinued

Glossary

1) **Brightness:** Brightness values are measured during a current pulse of typically 25 ms, with an internal reproducibility of ±8 % and an expanded uncertainty of ±11 % (acc. to GUM with a coverage factor of k = 3).

2) **Reverse Operation:** This product is intended to be operated applying a forward current within the specified range. Applying any continuous reverse bias or forward bias below the voltage range of light emission shall be avoided because it may cause migration which can change the electro-optical characteristics or damage the LED.

3) **Wavelength:** The wavelength is measured at a current pulse of typically 25 ms, with an internal reproducibility of ±0.5 nm and an expanded uncertainty of ±1 nm (acc. to GUM with a coverage factor of k = 3).

4) **Forward Voltage:** The forward voltage is measured during a current pulse of typically 8 ms, with an internal reproducibility of ±0.05 V and an expanded uncertainty of ±0.1 V (acc. to GUM with a coverage factor of k = 3).

5) **Thermal Resistance:** Rth max is based on statistic values (6σ) used for Derating.

6) **Typical Values:** Due to the special conditions of the manufacturing processes of semiconductor devices, the typical data or calculated correlations of technical parameters can only reflect statistical figures. These do not necessarily correspond to the actual parameters of each single product, which could differ from the typical data and calculated correlations or the typical characteristic line. If requested, e.g. because of technical improvements, these typ. data will be changed without any further notice.

7) **Characteristic curve:** In the range where the line of the graph is broken, you must expect higher differences between single devices within one packing unit.

8) **Tolerance of Measure:** Unless otherwise noted in drawing, tolerances are specified with ±0.1 and dimensions are specified in mm.

9) **Tape and Reel:** All dimensions and tolerances are specified acc. IEC 60286-3 and specified in mm.

Discontinued

Revision History

Version	Date	Change
1.7	2021-07-15	Product Image Features Schematic Transportation Box Dimensions of Transportation Box
1.8	2025-02-26	New Layout Applications Features
1.9	2026-10-02	Discontinued

Discontinued

Discontinued

EU RoHS and China RoHS compliant product
此产品符合欧盟 RoHS 指令的要求；
按照中国的相关法规和标准，
不含有毒有害物质或元素。

Published by ams-OSRAM AG
Tobelbader Strasse 30, 8141 Premstaetten, Austria
Phone +43 3136 500-0
ams-osram.com
© All rights reserved