OSRAM SFH 7250

Datasheet

Discontinued

Published by ams-OSRAM AG
Tobelbader Strasse 30, 8141 Premstaetten, Austria
Phone +43 3136 500-0
ams-osram.com
© All rights reserved

OSRAM

Multi TOPLED™

SFH 7250

Infrared-Emitter (850 nm) and Si-Phototransistor



Applications

- Appliances & tools
- Factory automation
- Home & building automation

Features

- Package: clear epoxy
- Qualifications: The product qualification test plan is based on the guidelines of AEC-Q101-REV-C, Stress Test Qualification for Automotive Grade Discrete Semiconductors.
- ESD: 2 kV acc. to ANSI/ESDA/JEDEC JS-001 (HBM, Class 2)
- Available on tape and reel
- SMT package with IR emitter (850 nm) and Si-phototransistor
- Suitable for SMT assembly
- Emitter and detector can be controlled separately

Discontinued

Ordering Information

Type	Radiant intensity [1)] typ. I_F = 70 mA; t_p = 20 ms I_e	Ordering Code
SFH 7250	10 mW/sr	Q65111A3188

Discontinued

Maximum Ratings

T_A = 25 °C

Parameter	Symbol		Values
Operating temperature range	T_{op}	min.	-40 °C
		max.	100 °C
Storage temperature range	T_{stg}	min.	-40 °C
		max.	100 °C
Junction temperature	T_j	max.	100 °C
ESD withstand voltage acc. to ANSI/ESDA/JEDEC JS-001 - HBM	V_{ESD}	max.	2 kV
Emitter			
Reverse voltage	V_R	max.	5 V
Forward current	I_F	max.	70 mA
Forward current pulsed $t_p \leq 10$ µs; D = 0.005	I_{pulse}	max.	0.7 A
Power consumption	P_{tot}	max.	140 mW
Phototransistor			
Collector current	I_C	max.	15 mA
Surge current tp ≤ 10 µs; D = 0	I_{CS}	max.	75 mA
Collector-emitter voltage	V_{CE}	max.	35 V

The stated maximum ratings refer to one chip.

Discontinued

Characteristics

T_A = 25 °C

Parameter	Symbol		Values
Emitter			
Peak wavelength I_F = 70 mA, t_p = 20 ms	λ_{peak}	typ.	860 nm
Centroid wavelength I_F = 70 mA, t_p = 20 ms	$\lambda_{centroid}$	typ.	850 nm
Spectral bandwidth at 50% Irel,max (FWHM) I_F = 70 mA, t_p = 20 ms	$\Delta\lambda$	typ.	30 nm
Half angle	ϕ	typ.	± 60 °
Dimensions of chip area	L x W	typ.	0.2 x 0.2 mm x mm
Rise time (10% / 90%) I_F = 70 mA, R_L = 50 Ω	t_r	typ.	12 ns
Fall time (10% / 90%) I_F = 70 mA, R_L = 50 Ω	t_f	typ.	12 ns
Forward voltage 8) I_F = 70 mA, t_p = 20 ms	V_F	typ. max.	1.6 V 1.9 V
Forward voltage 8) I_F = 500 mA, t_p = 100 µs	V_F	typ. max.	2.4 V 2.9 V
Reverse current VR = 5 V	I_R	typ. max.	not designed for reverse operation
Total radiant flux I_F = 70 mA, t_p = 20 ms	Φ_e	typ.	40 mW
Radiant intensity 1) I_F = 70 mA, t_p = 20 ms	I_e	min. typ.	6.3 mW / sr 10 mW / sr
Radiant intensity I_F = 500 mA, t_p = 100 µs	I_e	typ.	60 mW / sr
Temperature coefficient of brightness I_F = 70 mA, t_p = 20 ms	TC_I	typ.	-0.5 % / K
Temperature coefficient of voltage I_F = 70 mA, t_p = 20 ms	TC_V	typ.	-0.7 mV / K
Temperature coefficient of wavelength I_F = 70 mA, t_p = 20 ms	TC_λ	typ.	0.3 nm / K
Thermal resistance junction – ambient 9)	Rth_{JA}	max.	500 K/ W
Thermal resistance junction – solder point	Rth_{JS}	max.	400 K/ W

The stated characteristics refer to one chip.

Discontinued

Characteristics

T_A = 25 °C

Parameter	Symbol		Values
Phototransistor			
Wavelength of max. sensitivity	$\lambda_{S\ max}$	typ.	990 nm
Spectral range of sensitivity	$\lambda_{10\%}$	typ.	440 … 1150 nm
Radiant sensitive area Ø = 240 µm	A	typ.	0.038 mm^2
Dimensions of chip area	L x W	typ.	0.45 x 0.45 mm x mm
Half angle	φ	typ.	± 60 °
Capacitance V_{CE} = 0 V, f = 1 MHz, E = 0	C_{CE}	typ.	5 pF
Dark current V_{CE} = 20 V, E = 0	I_{CE0}	typ. max.	1 nA 200 nA
Photocurrent [10] λ = 950 nm, E_e = 0.1 mW/cm^2, R_L = 1 kΩ	I_{PCE}	min.	16 µA
Rise time I_C = 1 mA, V_{CE} = 5 V, R_L = 1 kΩ	t_r	typ.	7 µs
Fall time I_C = 1 mA, V_{CE} = 5 V, R_L = 1 kΩ	t_f	typ.	7 µs
Collector-emitter saturation voltage I_C = 5 µA, E_e = 0.1 mW/cm^2	V_{CEsat}	typ.	150 mV
Thermal resistance junction – ambient [9]	R_{thJA}	max.	450 K/ W

The stated characteristics refer to one chip.

Discontinued

Brightness Groups

Group	Radiant intensity [1)2)] I_F = 70 mA; t_p = 20 ms min. I_e	Radiant intensity [1)2)] I_F = 70 mA; t_p = 20 ms max. I_e
Q	7.1 mW/sr	11.2 mW/sr
R	11.2 mW/sr	18.0 mW/sr

Discontinued

Relative Spectral Emission [3)]

- infrared (850 nm): $I_{e,rel} = f(\lambda)$; I_F = 70 mA; t_p = 20 ms

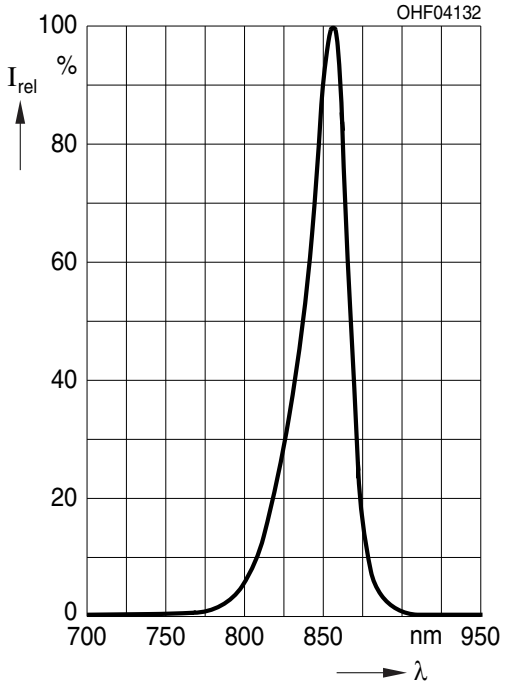

Radiation Characteristics [3)]

$I_{rel} = f(\varphi)$; T_A = 25 °C

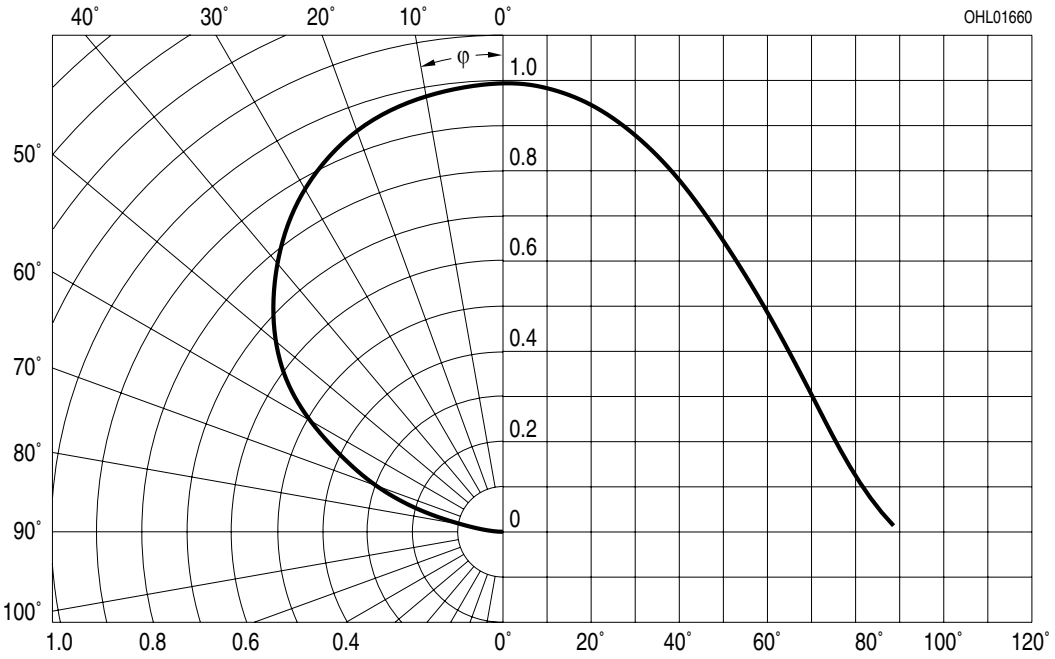

Discontinued

Relative Spectral Sensitivity [3]

- phototransistor: $S_{rel} = f(\lambda)$

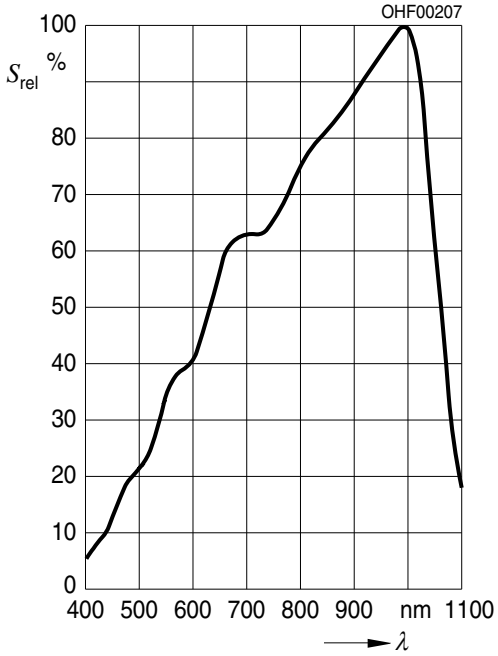

Forward current [3]

- infrared (850 nm): $I_F = f(V_F)$; single pulse; $t_p = 100\ \mu s$

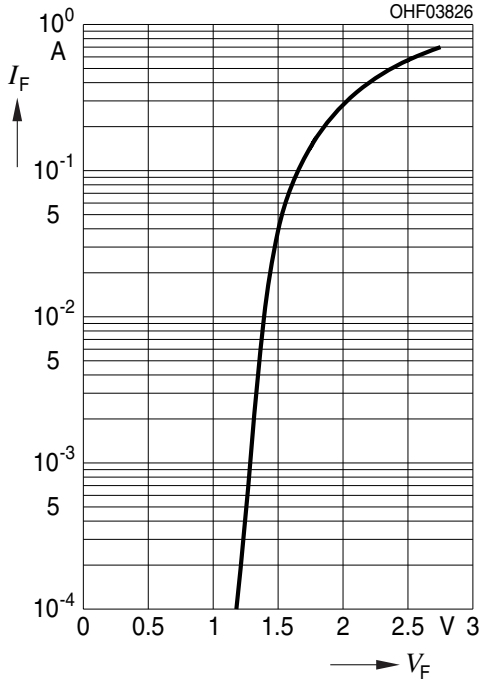

Relative Radiant Intensity [3], [4]

- infrared (850 nm): $I_e/I_e(70mA) = f(I_F)$; single pulse; $t_p = 25\ \mu s$

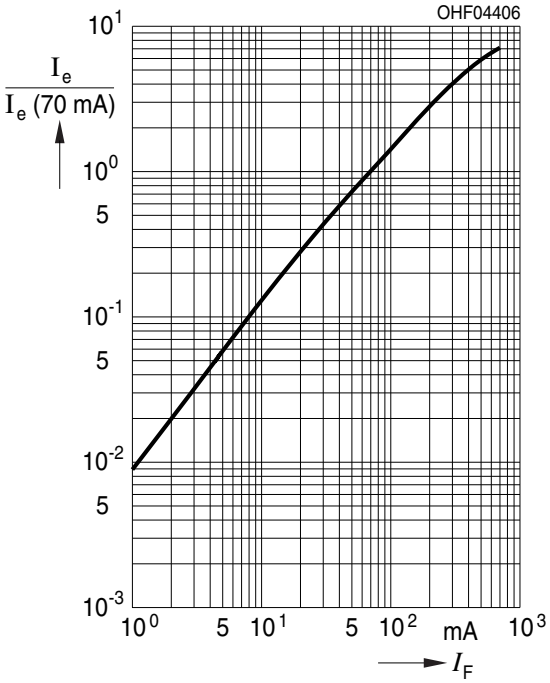

Discontinued

Photocurrent 3)

■ phototransistor: $I_{PCE} = f(E_e)$; $V_{CE} = 5V$

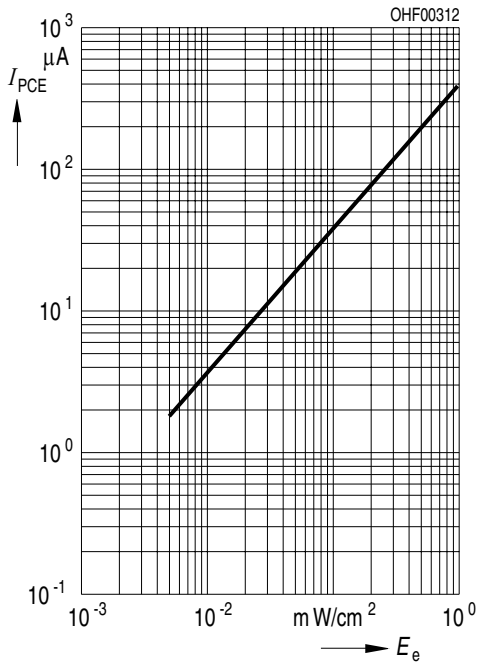

Photocurrent 3)

■ phototransistor: $I_{PCE} = f(V_{CE})$; E_e = Parameter

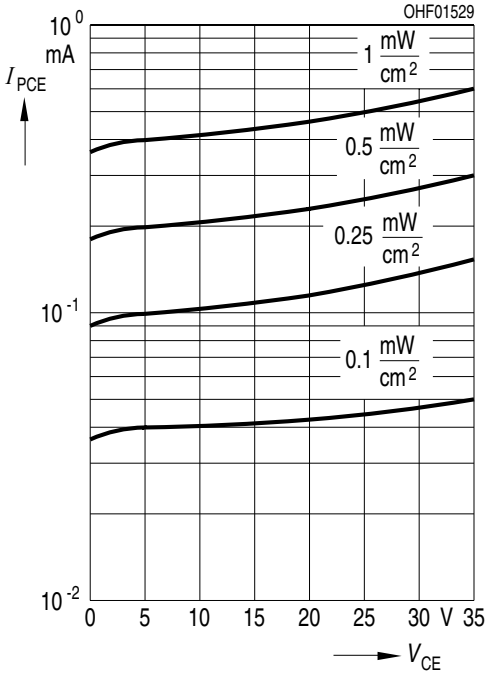

Dark Current 3)

■ phototransistor: $I_{CE0} = f(V_{CE})$; E = 0

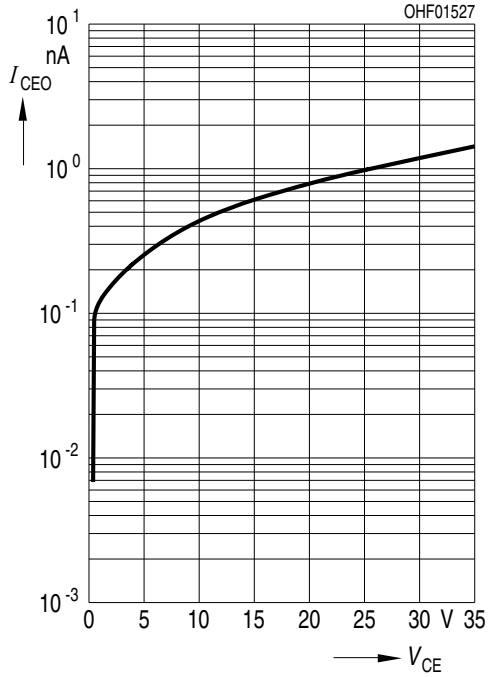

Discontinued

Collector-Emitter Capacitance 3)

- phototransistor: $C_{CE} = f(V_{CE})$; f = 1 MHz; E = 0

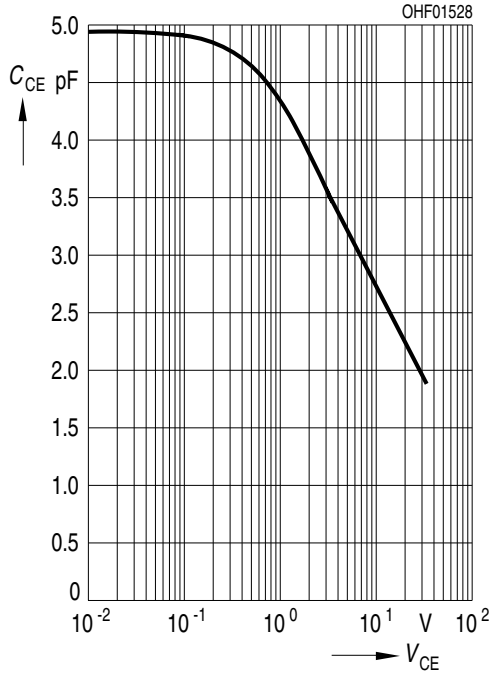

Dark Current 3)

- phototransistor: $I_{CE0} = f(T_A)$; V_{CE} = 5 V; E = 0

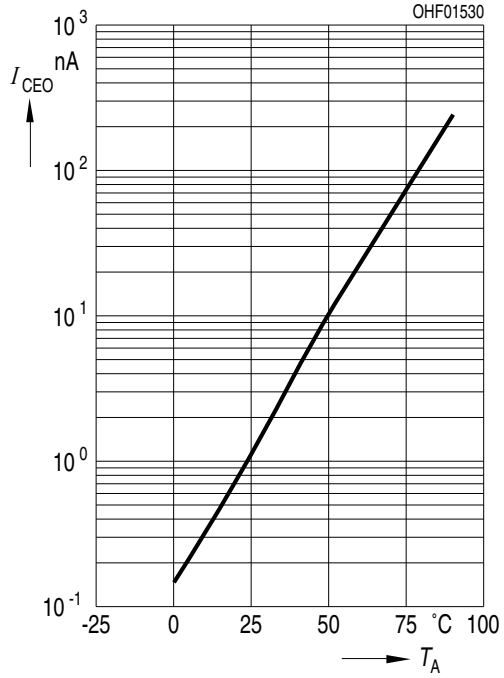

Photocurrent 3)

- phototransistor: $I_{PCE, rel} = f(T_A)$; V_{CE} = 5V

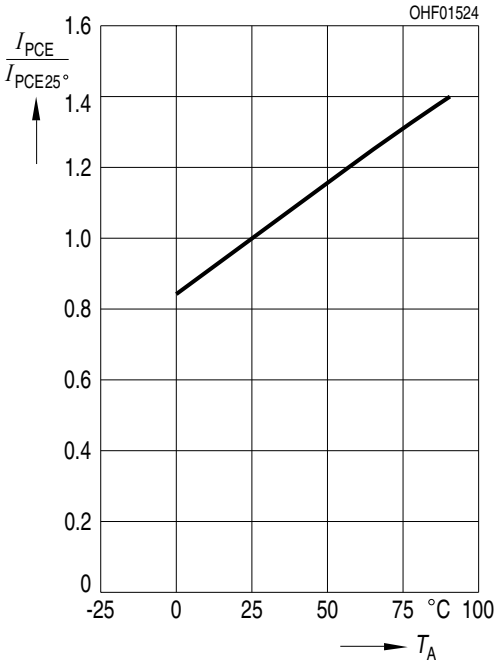

Discontinued

Max. Permissible Forward Current

- infrared (850 nm): $I_F = f(T_A)$; Rth_{ja} = 500 K / W



Permissible Pulse Handling Capability

- infrared (850 nm): $I_F = f(t_p)$; D = parameter; T_A = 25 °C

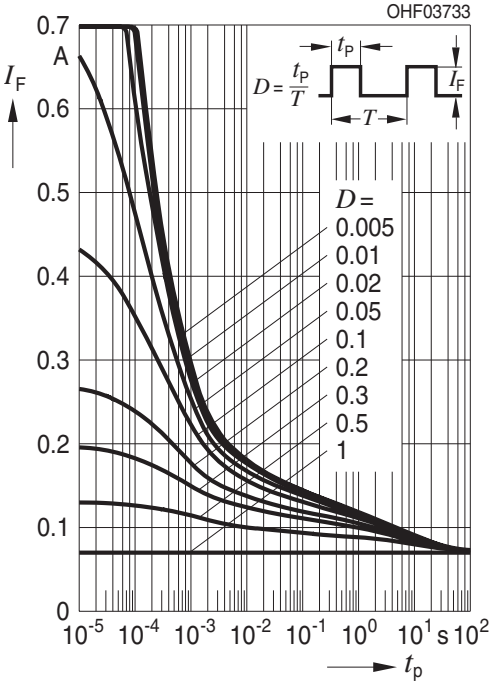

Discontinued

Dimensional Drawing [5)]

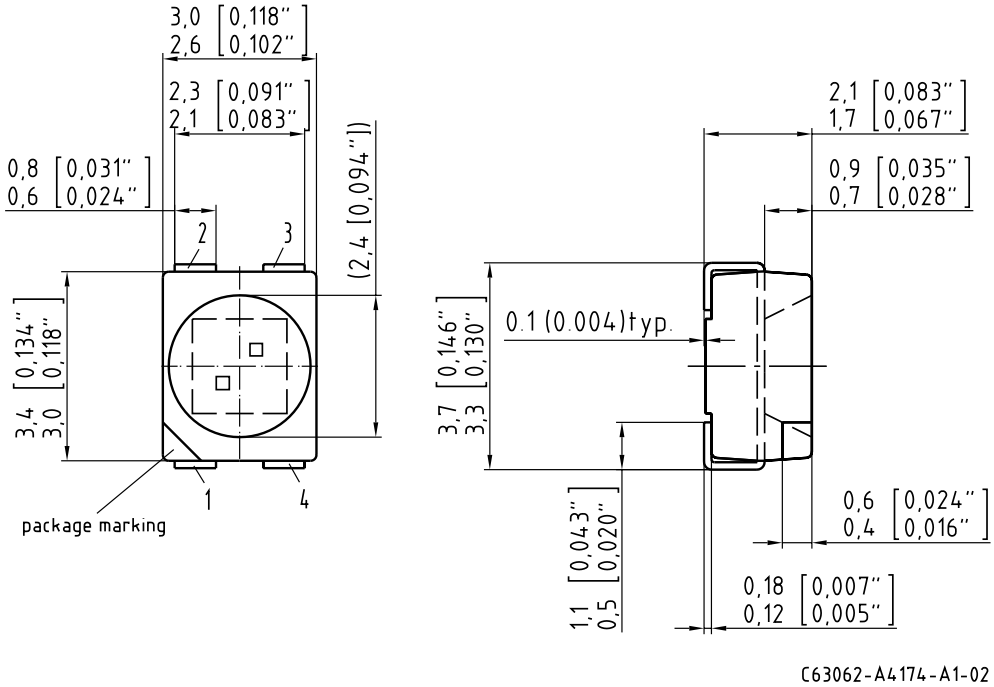

Further Information:

Approximate Weight: 34.0 mg

Pin	Description
1	Anode Emitter 1
2	Cathode Emitter 1
3	Collector Phototransistor
4	Emitter Phototransistor

Discontinued

Recommended Solder Pad [5]

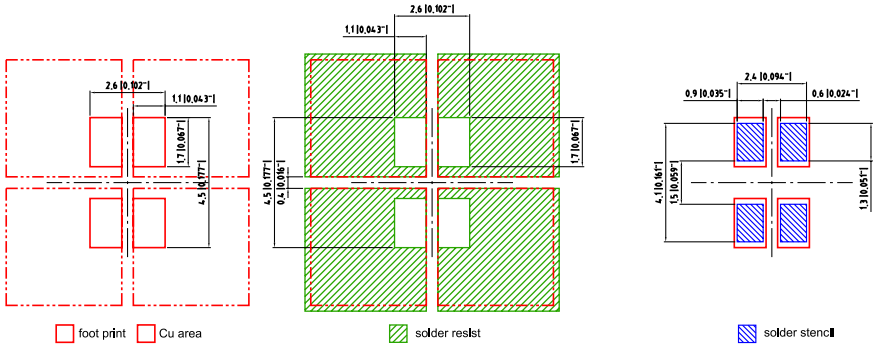

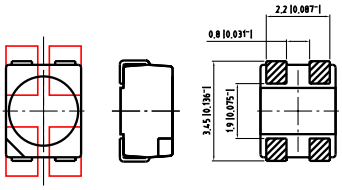

E062.3010.148 -01

Discontinued

Reflow Soldering Profile

Product complies to MSL Level 2 acc. to JEDEC J-STD-020E

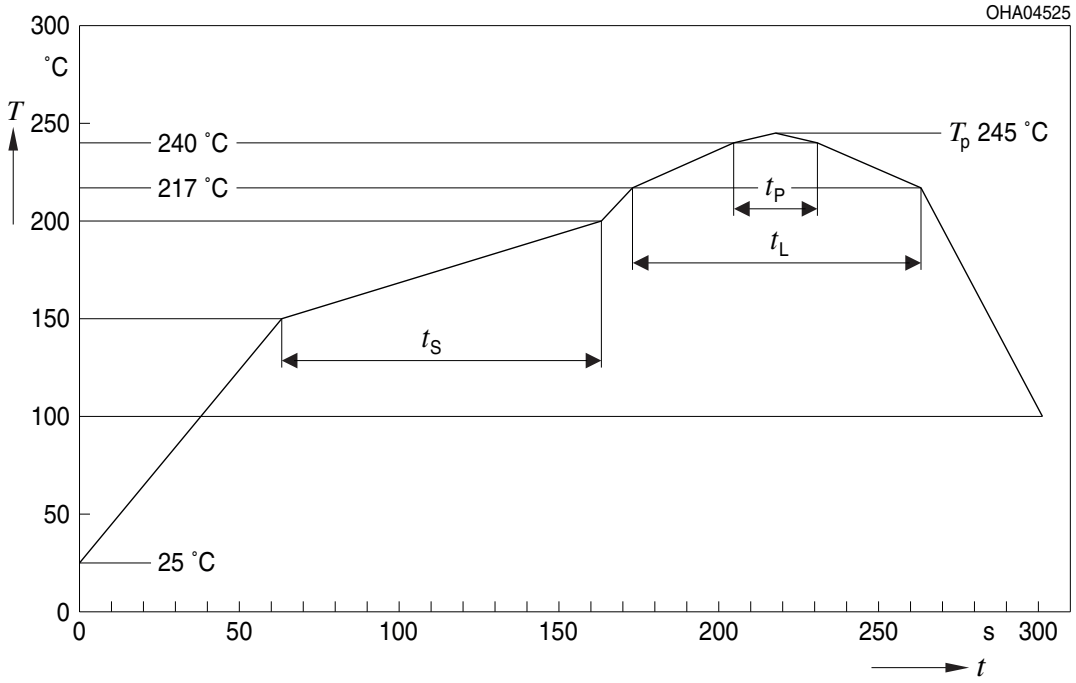

Profile Feature	Symbol	Pb-Free (SnAgCu) Assembly			Unit
		Minimum	Recommendation	Maximum	
Ramp-up rate to preheat*) 25 °C to 150 °C			2	3	K/s
Time t_S T_{Smin} to T_{Smax}	t_S	60	100	120	s
Ramp-up rate to peak*) T_{Smax} to T_P			2	3	K/s
Liquidus temperature	T_L		217		°C
Time above liquidus temperature	t_L		80	100	s
Peak temperature	T_P		245	260	°C
Time within 5 °C of the specified peak temperature T_P - 5 K	t_P	10	20	30	s
Ramp-down rate* T_P to 100 °C			3	6	K/s
Time 25 °C to T_P				480	s

All temperatures refer to the center of the package, measured on the top of the component
* slope calculation DT/Dt: Dt max. 5 s; fulfillment for the whole T-range

Discontinued

Taping [5)]

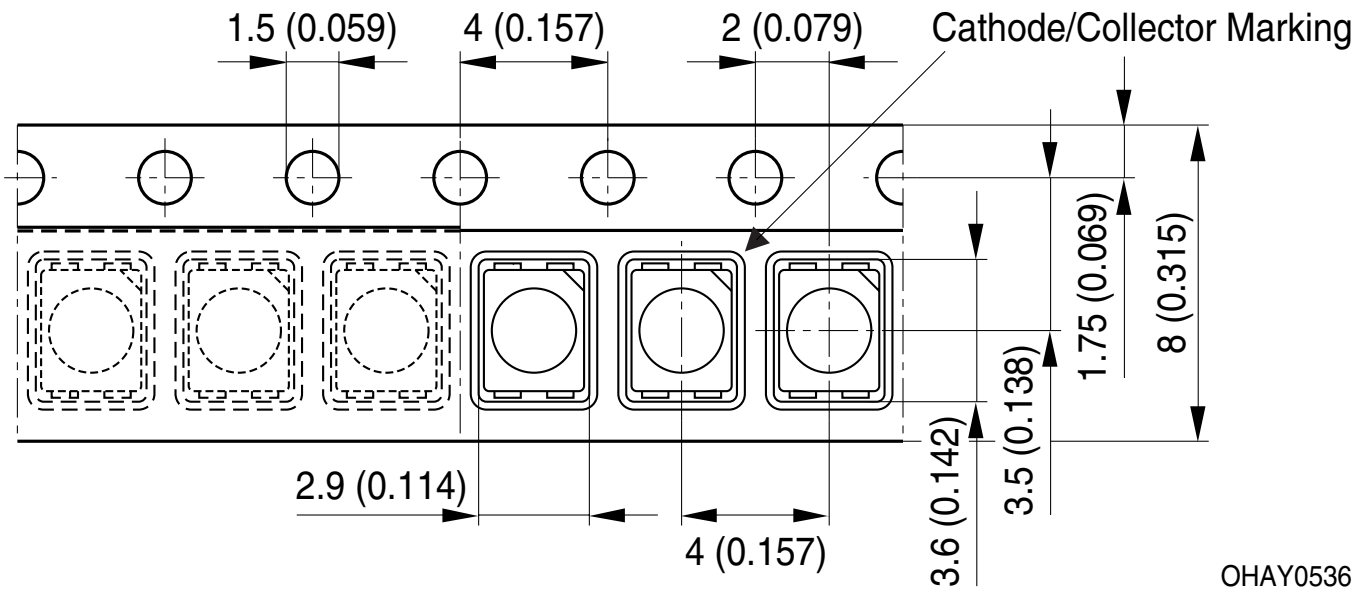

Discontinued

Tape and Reel [6)]

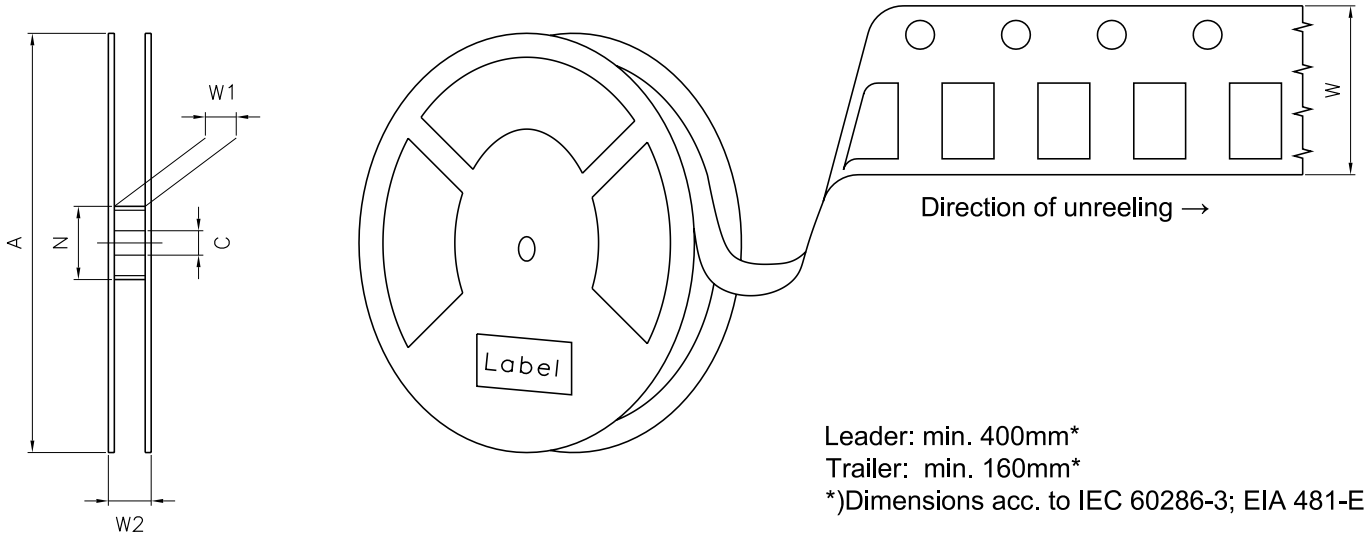

Leader: min. 400mm*
Trailer: min. 160mm*
*)Dimensions acc. to IEC 60286-3; EIA 481-E

Reel Dimensions

A	W	N_{min}	W_1	$W_{2\,max}$	Pieces per PU
180 mm	8 + 0.3 / - 0.1 mm	60 mm	8.4 + 2 mm	14.4 mm	2000
330 mm	8 + 0.3 / - 0.1 mm	60 mm	8.4 + 2 mm	14.4 mm	8000

Discontinued

Barcode-Product-Label (BPL)

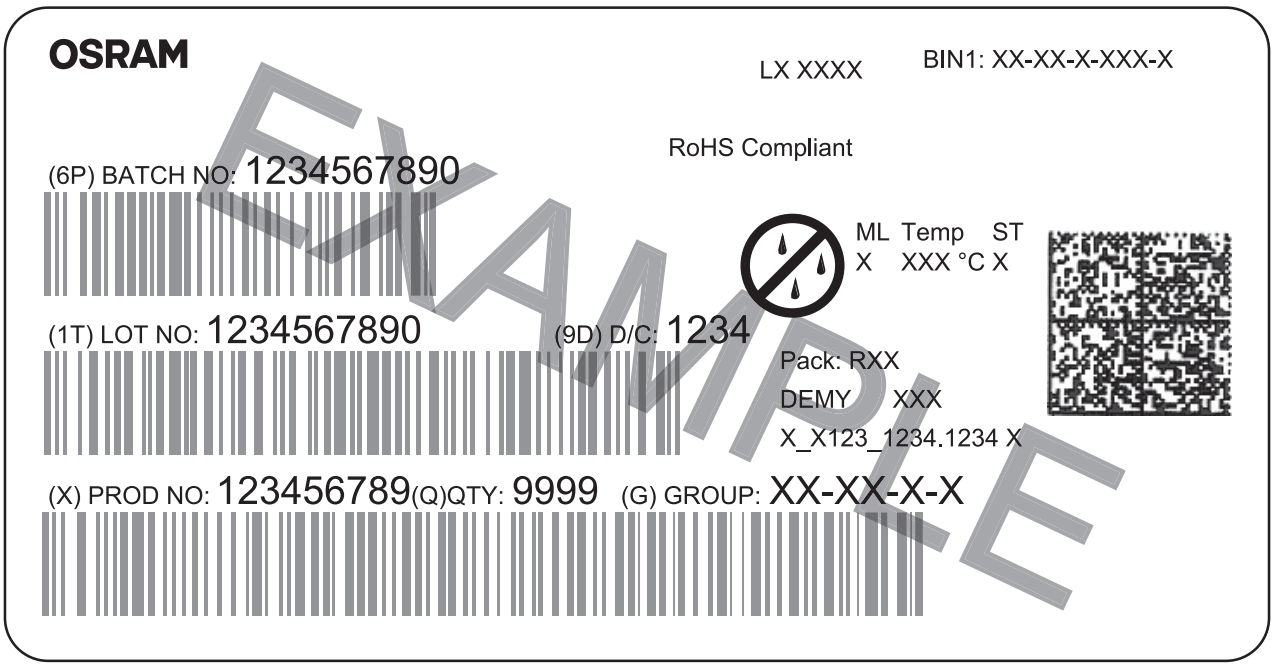

OHA04563

Dry Packing Process and Materials [5)]

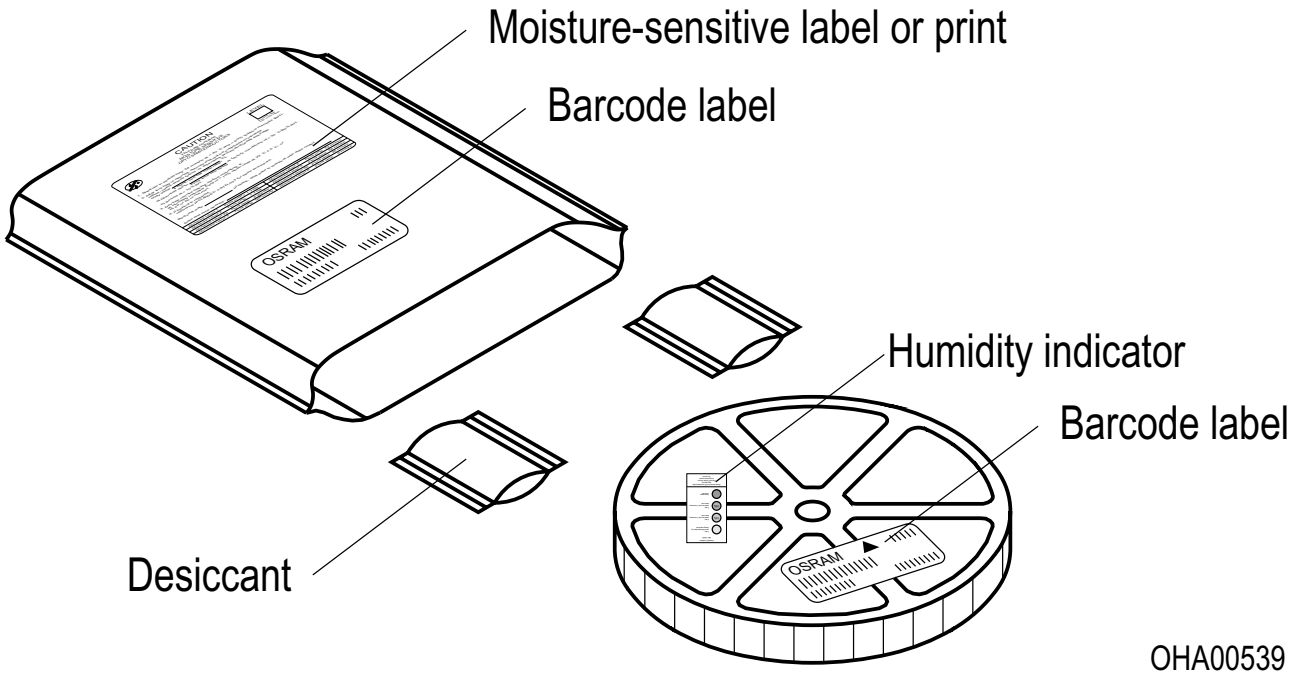

OHA00539

Moisture-sensitive product is packed in a dry bag containing desiccant and a humidity card according JEDEC-STD-033.

Discontinued

Disclaimer

Attention please!

The information describes the type of component and shall not be considered as assured characteristics.
Terms of delivery and rights to change design reserved. Due to technical requirements components may contain dangerous substances.
For information on the types in question please contact our Sales Organization.
If printed or downloaded, please find the latest version on our website.

Packing

Please use the recycling operators known to you. We can also help you – get in touch with your nearest sales office. By agreement we will take packing material back, if it is sorted. You must bear the costs of transport. For packing material that is returned to us unsorted or which we are not obliged to accept, we shall have to invoice you for any costs incurred.

Product and functional safety devices/applications or medical devices/applications

Our components are not developed, constructed or tested for the application as safety relevant component or for the application in medical devices.
Our products are not qualified at module and system level for such application.

In case buyer – or customer supplied by buyer – considers using our components in product safety devices/ applications or medical devices/applications, buyer and/or customer has to inform our local sales partner immediately and we and buyer and /or customer will analyze and coordinate the customer-specific request between us and buyer and/or customer.

Discontinued

Glossary

1) **Radiant intensity:** Measured at a solid angle of Ω = 0.01 sr

2) **Brightness:** The brightness values are measured with a tolerance of ±11%.

3) **Typical Values:** Due to the special conditions of the manufacturing processes of semiconductor devices, the typical data or calculated correlations of technical parameters can only reflect statistical figures. These do not necessarily correspond to the actual parameters of each single product, which could differ from the typical data and calculated correlations or the typical characteristic line. If requested, e.g. because of technical improvements, these typ. data will be changed without any further notice.

4) **Testing temperature:** TA = 25°C (unless otherwise specified)

5) **Tolerance of Measure:** Unless otherwise noted in drawing, tolerances are specified with ±0.1 and dimensions are specified in mm.

6) **Tape and Reel:** All dimensions and tolerances are specified acc. IEC 60286-3 and specified in mm.

Discontinued

Glossary (continued)

7) **Reverse Operation:** This product is intended to be operated applying a forward current within the specified range. Applying any continuous reverse bias or forward bias below the voltage range of light emission shall be avoided because it may cause migration which can change the electro-optical characteristics or damage the LED.
8) **Forward Voltage:** The forward voltages are measured with a tolerance of ±0.1 V.
9) **Thermal resistance:** junction – ambient, mounted on PC-board (FR4), pad size 16mm2 each.
10) **Photocurrent:** The photocurrent values are measured (by irradiating the devices with a homogenous light source and applying a voltage to the device) with a tolerance of ±11 %.

Discontinued

Revision History

Version	Date	Change
1.4	2021-05-19	New Layout
1.5	2021-09-16	Photocurrent Groups
1.6	2023-08-09	New Layout Applications
1.7	2026-11-16	Discontinued

Discontinued

Discontinued

EU RoHS and China RoHS compliant product
此产品符合欧盟 RoHS 指令的要求；
按照中国的相关法规和标准，
不含有毒有害物质或元素。

Published by ams-OSRAM AG
Tobelbader Strasse 30, 8141 Premstaetten, Austria
Phone +43 3136 500-0
ams-osram.com
© All rights reserved