OSRAM SU CULBN2.VC

Datasheet

Published by ams-OSRAM AG
Tobelbader Strasse 30, 8141 Premstaetten, Austria
Phone +43 3136 500-0
ams-osram.com
© All rights reserved

OSLON™ UV 3535

SU CULBN2.VC

The ams OSRAM OSLON™ UV 3535 series combines exceptional wall-plug efficiency, high optical output, and extended lifetime with superior germicidal performance in a compact form factor, enabling versatile, eco-friendly UV-C disinfection and treatment solutions. Its robust, space-efficient design supports flexible system integration for efficient and eco-friendly UV-C solutions.

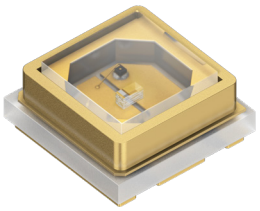

Applications

- Agriculture & horticulture
- UV-C disinfection & treatment

Features

- Package: Ceramic package with integrated glass cover
- Chip technology: UV Flip chip
- Color: λ_{peak} = 275 nm (● ultraviolet (UV-C))
- Typ. Radiation: 120° (0°), 120° (90°)
- Radiant Flux: typ. 7.6 mW
- Radiant Efficiency: typ. 4.7 %
- Electrical power: 0.17 W

Ordering Information

Type	Total radiant flux [1] I_F = 30 mA Φ_E	Ordering Code
SU CULBN2.VC-AJAQ-67-4E4G	5.0 ... 8.5 mW	Q65113A6816

UV-C RISK GROUP 3

WARNING UV-C emitted from this product.
Avoid eye and skin exposure to unshielded product.
Follow installation instructions and user manual.

Maximum Ratings

Parameter	Symbol		Values
Operating Temperature	T_{op}	min. max.	-30 °C 85 °C
Storage Temperature	T_{stg}	min. max.	-40 °C 100 °C
Junction Temperature	T_j	max.	100 °C
Forward current T_S = 25 °C	I_F	min. max.	1 mA 40 mA
Surge Current t ≤ 10 µs; D = 0.5 %; T_S = 25 °C	I_{FS}	max.	50 mA
ESD withstand voltage acc. to ANSI/ESDA/JEDEC JS-001 (HBM)	V_{ESD}		5 kV
Reverse voltage [2)]	V_R		Not designed for reverse operation

Characteristics

I_F = 30 mA; T_S = 25 °C

Parameter	Symbol		Values
Peak Wavelength [3]	λ_{peak}	min. typ. max.	270 nm 275 nm 280 nm
Forward Voltage [4] I_F = 30 mA	V_F	min. typ. max.	5.00 V 5.40 V 6.50 V
Reverse current [2]	I_R		Not designed for reverse operation
Real thermal resistance junction/solderpoint [5]	$R_{thJS\ real}$	typ.	45 K / W
Electrical thermal resistance junction/solderpoint with efficiency η_e = 3.9 %	$R_{thJS\ elec.}$	typ.	43 K / W

Brightness Groups

Group	Total radiant flux [1] I_F = 30 mA min. Φ_E	Total radiant flux [1] I_F = 30 mA max. Φ_E
AJ	5.0 mW	5.5 mW
AK	5.5 mW	6.0 mW
AL	6.0 mW	6.5 mW
AM	6.5 mW	7.0 mW
AN	7.0 mW	7.5 mW
AP	7.5 mW	8.0 mW
AQ	8.0 mW	8.5 mW

Forward Voltage Groups

Group	Forward Voltage [4] I_F = 30 mA min. V_F	Forward Voltage [4] I_F = 30 mA max. V_F
4E	5.00 V	5.50 V
4F	5.50 V	6.00 V
4G	6.00 V	6.50 V

Wavelength Groups

Group	Peak Wavelength [3] min. λ_{peak}	Peak Wavelength [3] max. λ_{peak}
6	270 nm	275 nm
7	275 nm	280 nm

Group Name on Label

Example: AJ-6-4E

Brightness	Wavelength	Forward Voltage
AJ	6	4E

Relative Spectral Emission [6)]

$I_{rel} = f(\lambda)$; $I_F = 30$ mA; $T_S = 25$ °C

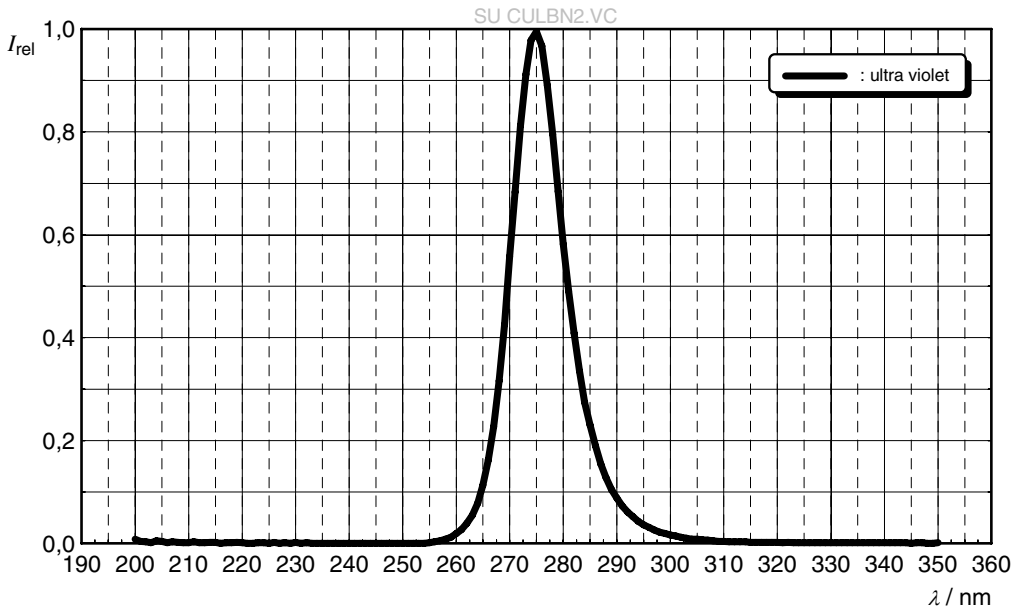

Radiation Characteristics [6)]

$I_{rel} = f(\varphi)$; $T_S = 25$ °C

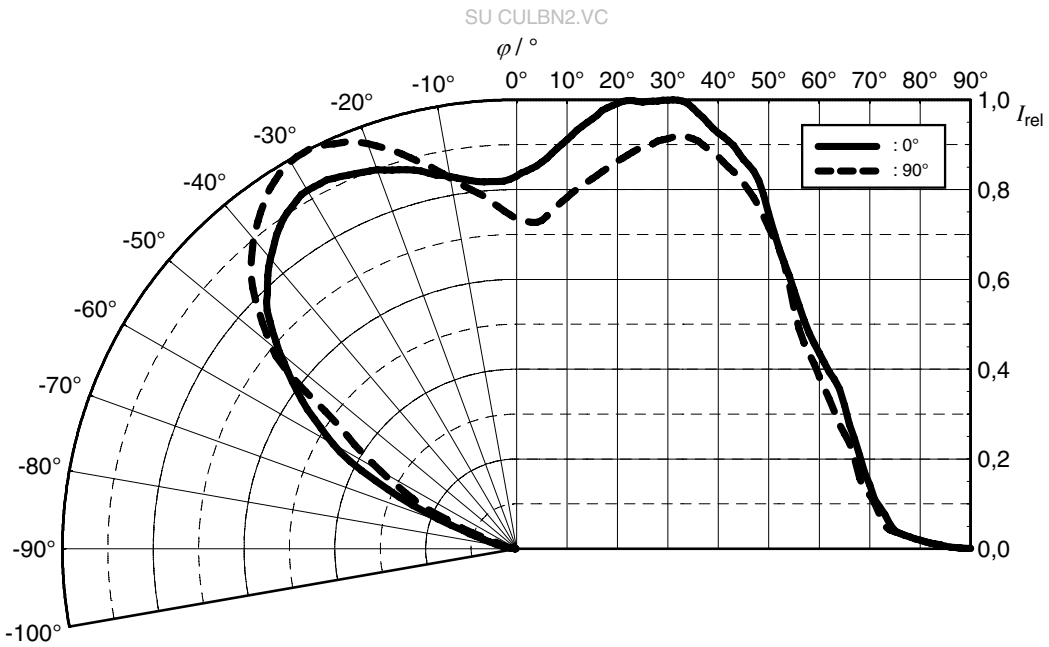

Forward current [6)]

$I_F = f(V_F)$; T_S = 25 °C

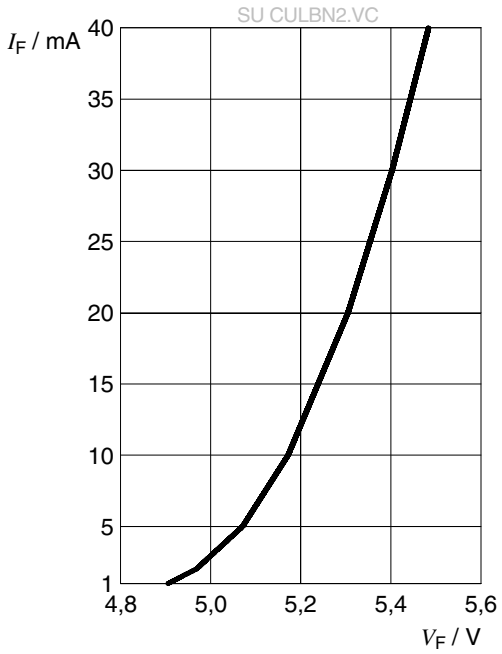

Relative Radiant Power [6), 7)]

$\Phi_E/\Phi_E(30\ mA) = f(I_F)$; T_S = 25 °C

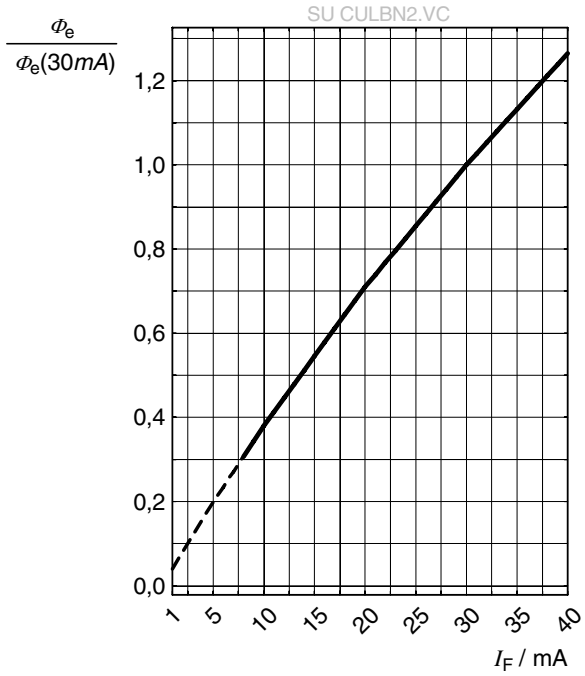

Peak Wavelength [6)]

$\lambda_{peak} = f(T_j)$; I_F = 30 mA

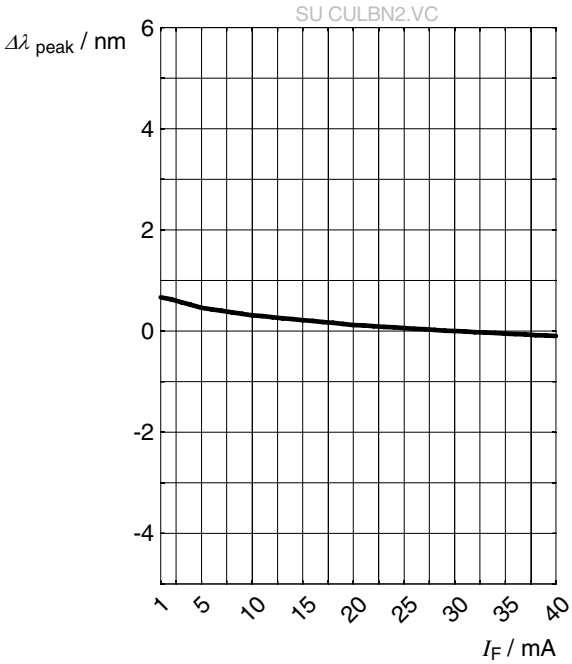

Forward Voltage [6)]

$\Delta V_F = V_F - V_F(25\ °C) = f(T_j)$; $I_F = 30$ mA

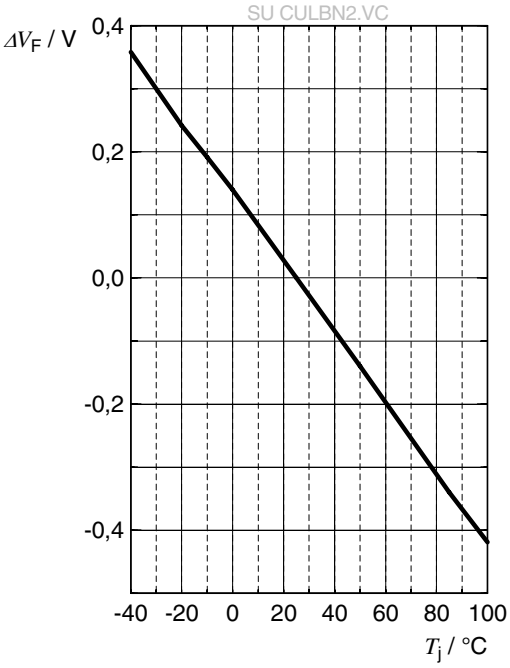

Relative Radiant Power [6)]

$\Phi_E/\Phi_E(25\ °C) = f(T_j)$; $I_F = 30$ mA

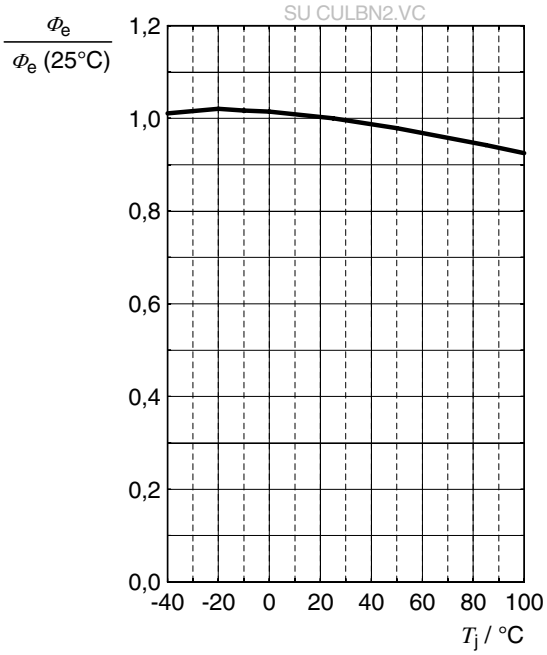

Peak Wavelength [6)]

$\lambda_{peak} = f(T_j)$; $I_F = 30$ mA

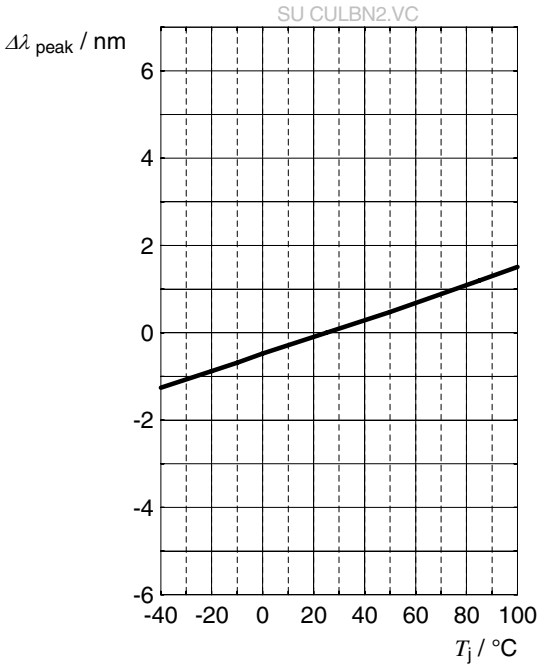

Max. Permissible Forward Current [5)]

$I_F = f(T)$

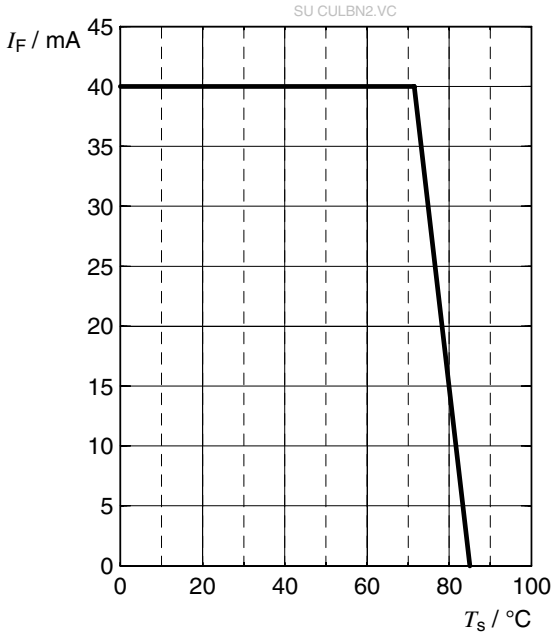

Dimensional Drawing [8)]

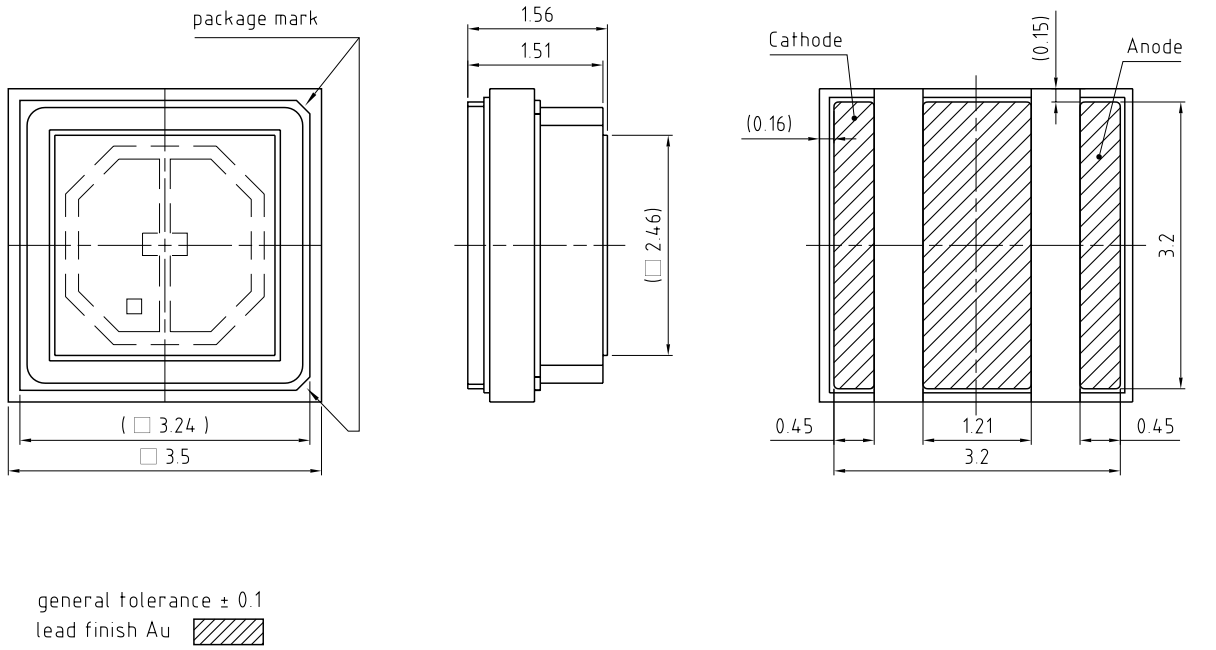

Further Information:

Approximate Weight: 82.7 mg

Package marking: Cathode

ESD advice: LED is protected by ESD device which is connected in parallel to LED-Chip.

Electrical Internal Circuit

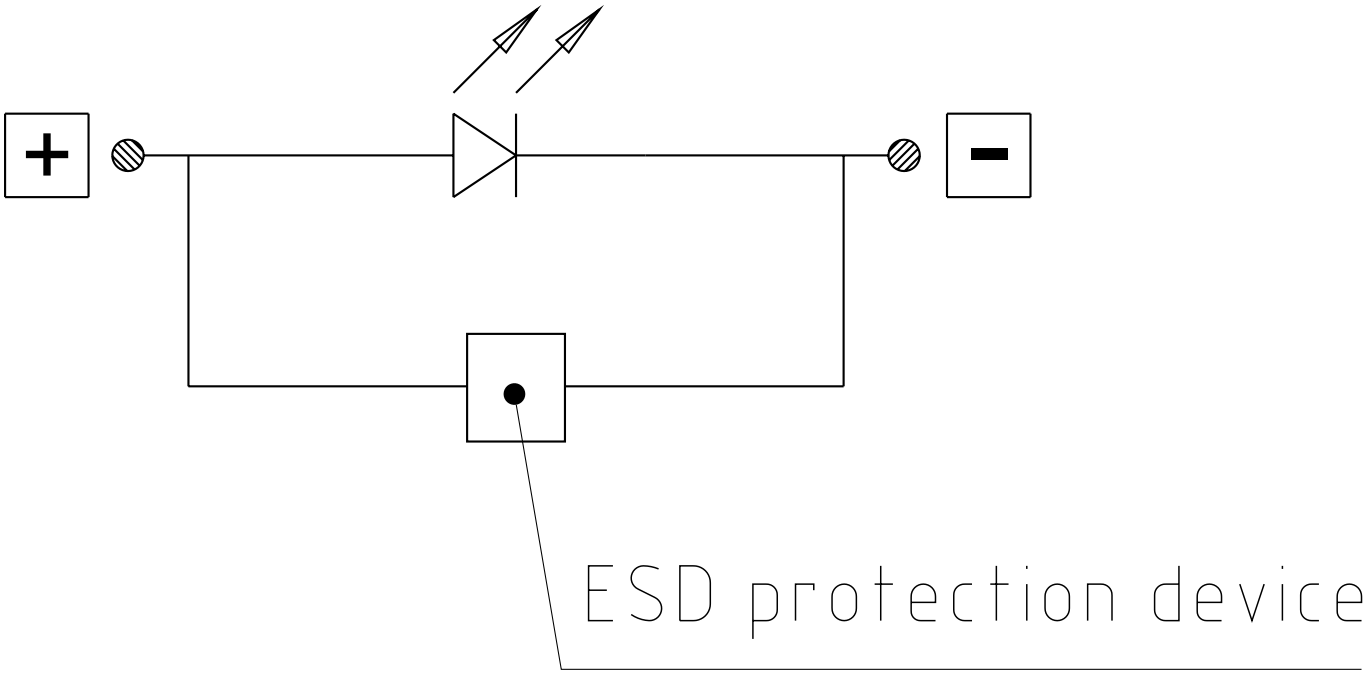

Recommended Solder Pad [8)]

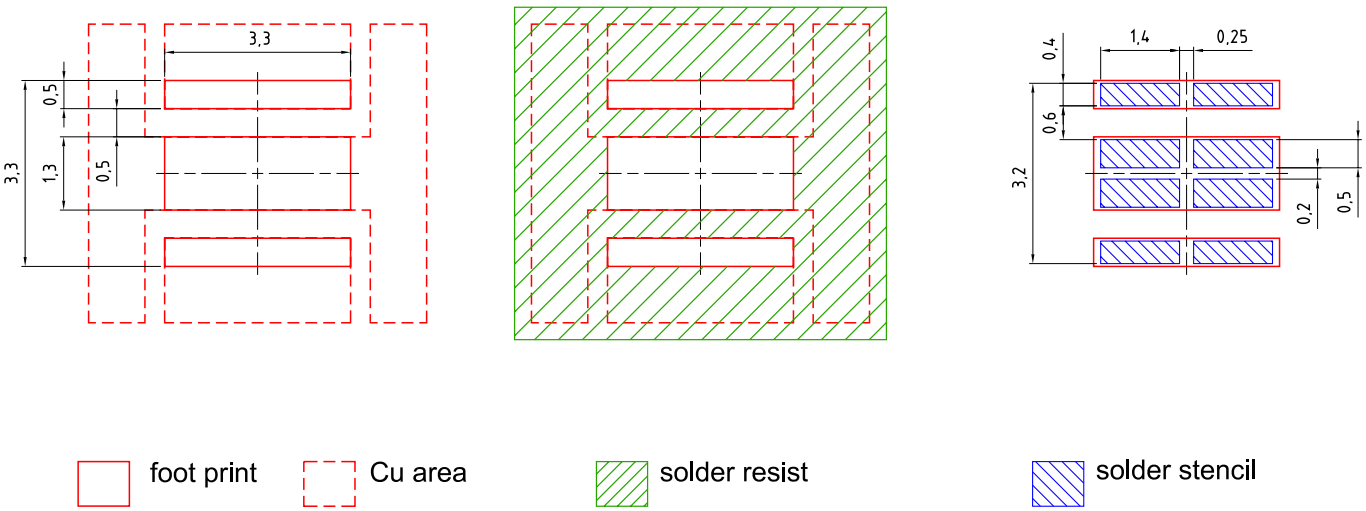

For superior solder joint connectivity results we recommend soldering under standard nitrogen atmosphere. Further information can be found in our Application Note: “Handling and Processing Details for Ceramic LEDs”. Package not suitable for any kind of wet cleaning or ultrasonic cleaning.

Reflow Soldering Profile

Product complies to MSL Level 3 acc. to JEDEC J-STD-020E

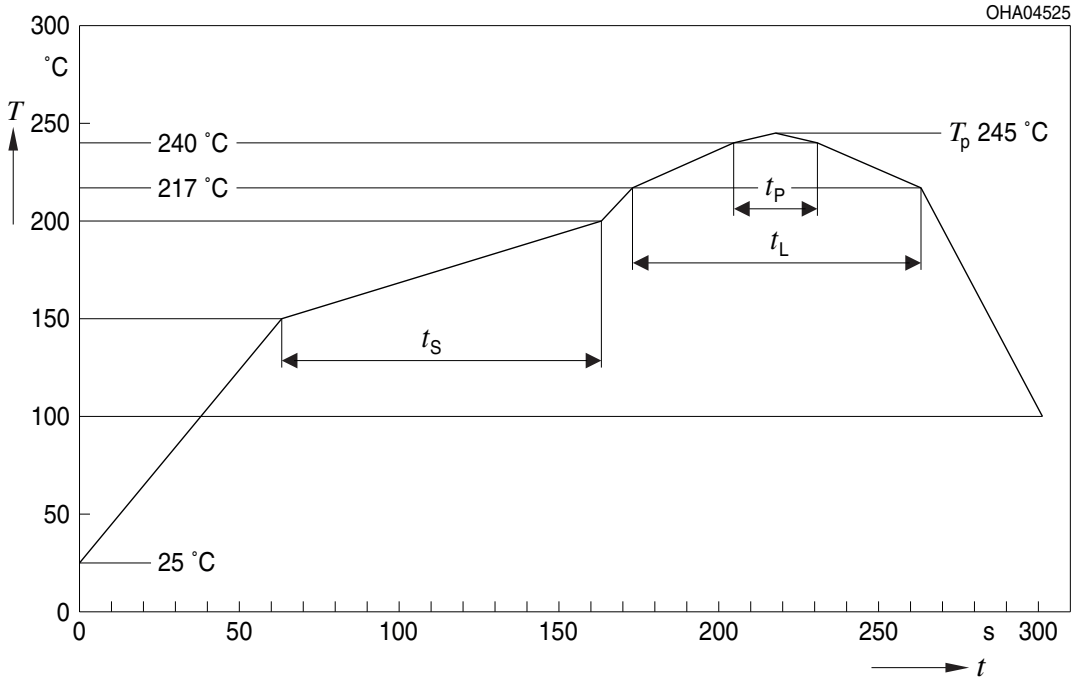

Profile Feature	Symbol	Pb-Free (SnAgCu) Assembly			Unit
		Minimum	Recommendation	Maximum	
Ramp-up rate to preheat*) 25 °C to 150 °C			2	3	K/s
Time t_S T_{Smin} to T_{Smax}	t_S	60	100	120	s
Ramp-up rate to peak*) T_{Smax} to T_P			2	3	K/s
Liquidus temperature	T_L		217		°C
Time above liquidus temperature	t_L		80	100	s
Peak temperature	T_P		245	260	°C
Time within 5 °C of the specified peak temperature T_P - 5 K	t_P	10	20	30	s
Ramp-down rate* T_P to 100 °C			3	6	K/s
Time 25 °C to T_P				480	s

All temperatures refer to the center of the package, measured on the top of the component
* slope calculation DT/Dt: Dt max. 5 s; fulfillment for the whole T-range

Taping [8)]

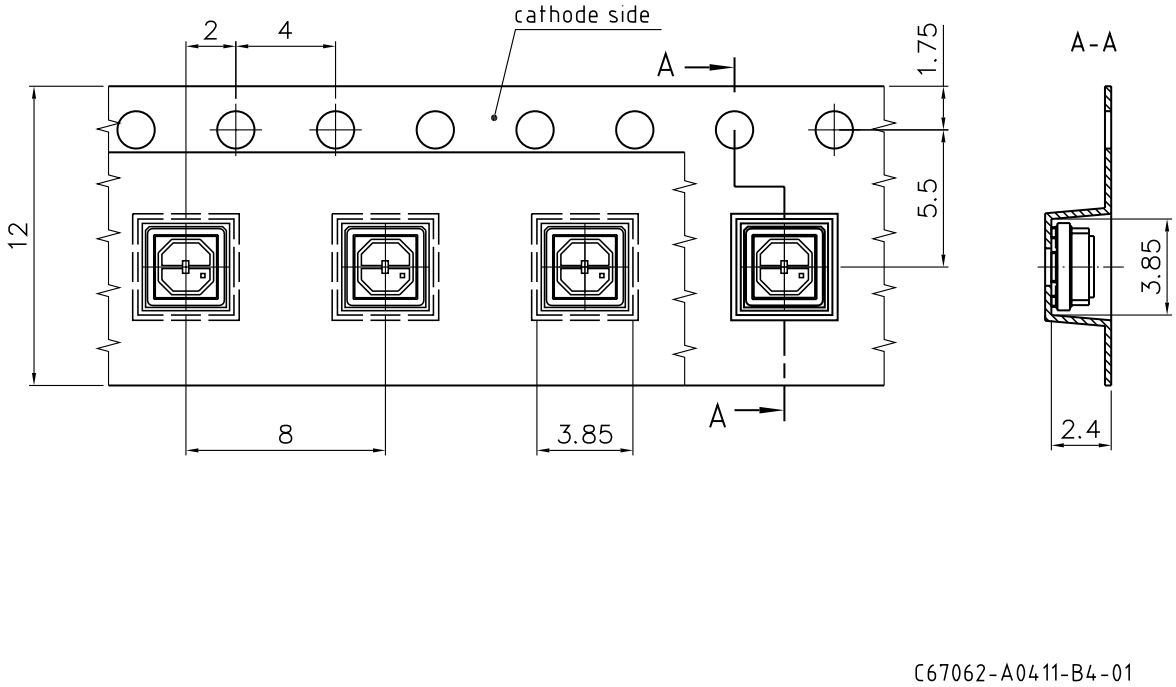

Tape and Reel [9)]

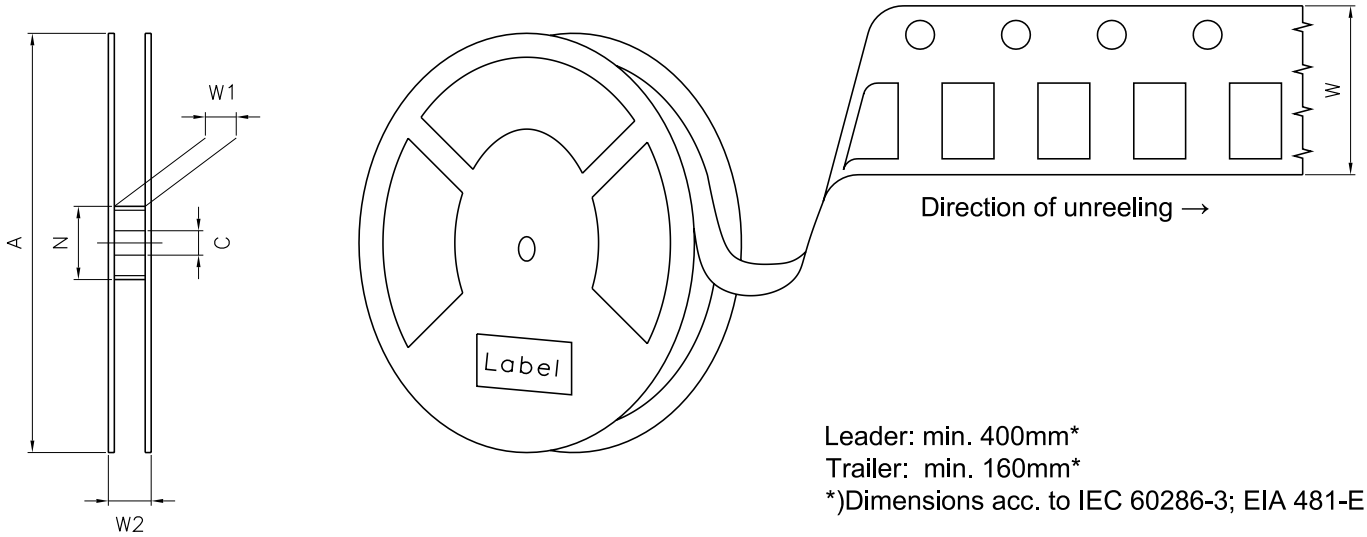

Leader: min. 400mm*
Trailer: min. 160mm*
*)Dimensions acc. to IEC 60286-3; EIA 481-E

Reel Dimensions

A	W	N_{min}	W_1	$W_{2\,max}$	Pieces per PU
180 mm	12 + 0.3 / - 0.1 mm	60 mm	12.4 + 2 mm	18.4 mm	500

Barcode-Product-Label (BPL)

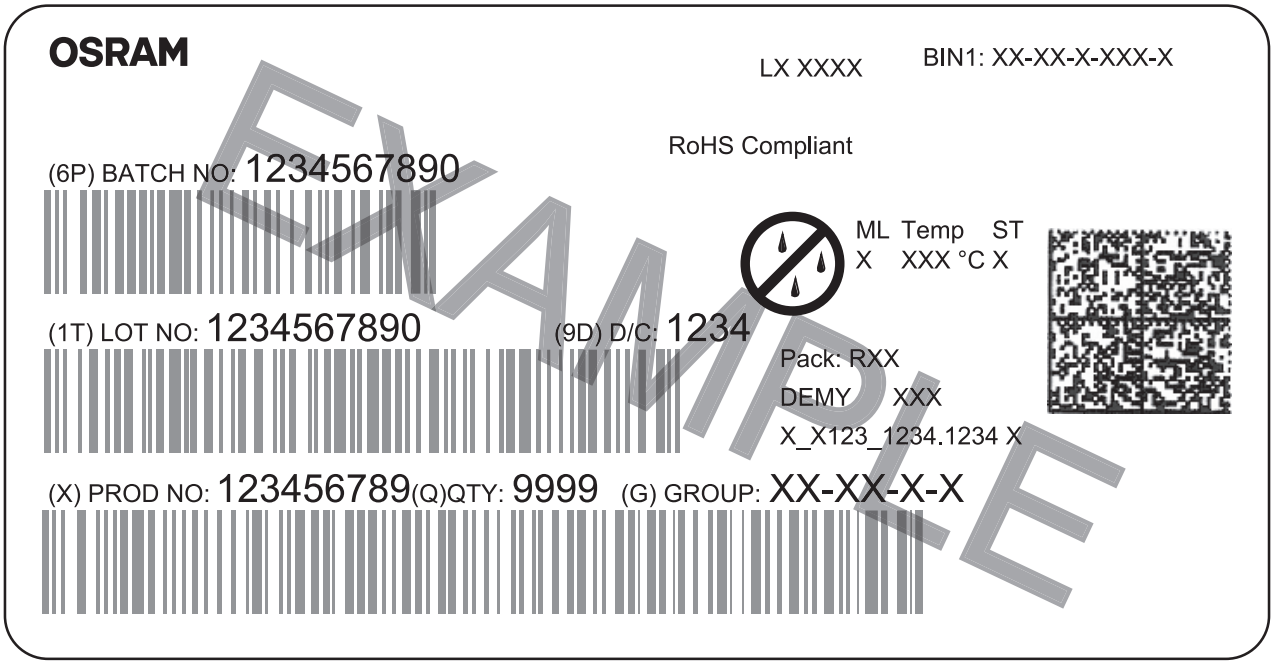

OHA04563

Dry Packing Process and Materials [8)]

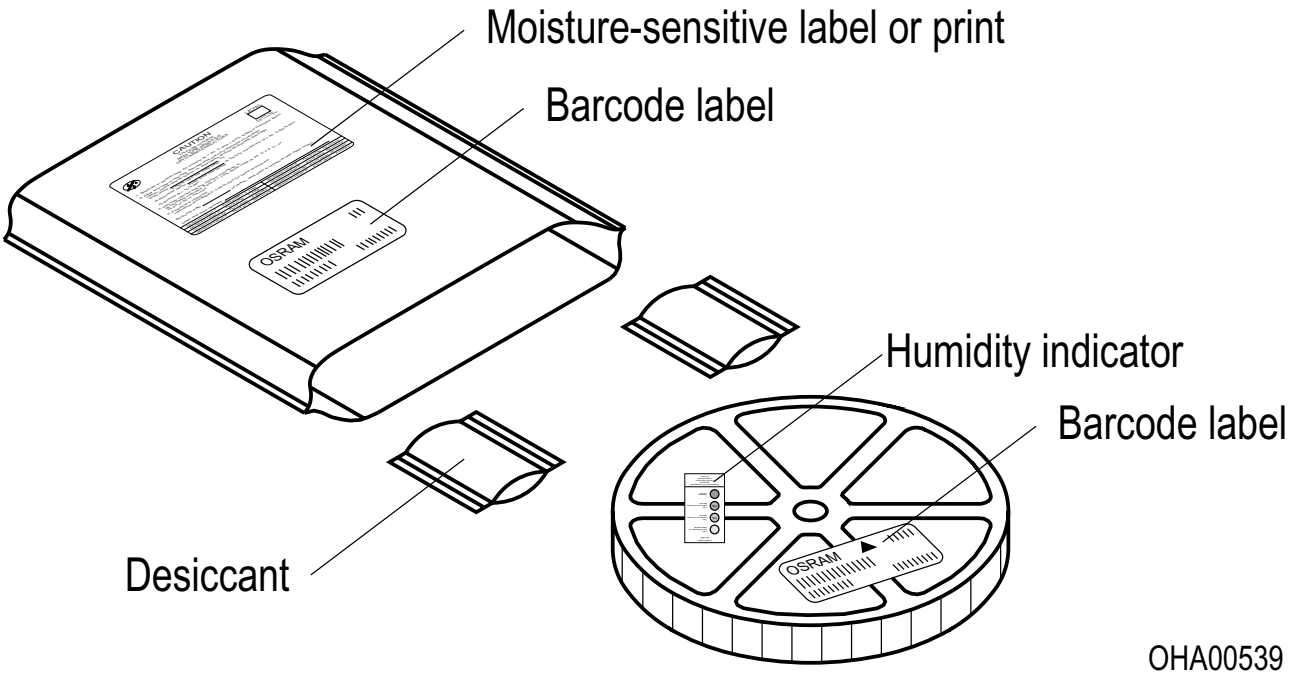

OHA00539

Moisture-sensitive product is packed in a dry bag containing desiccant and a humidity card according JEDEC-STD-033.

Notes

The evaluation of eye safety occurs according to the standard IEC 62471:2006 (photo biological safety of lamps and lamp systems). Within the risk grouping system of this IEC standard, the device specified in this data sheet falls into high risk group – RG 3. WARNING - UV emitted from this product. Avoid eye and skin contact to unshielded product.

Subcomponents of this device contain, in addition to other substances, metal filled materials including silver. Metal filled materials can be affected by environments that contain traces of aggressive substances. Therefore, we recommend that customers minimize device exposure to aggressive substances during storage, production, and use. Devices that showed visible discoloration when tested using the described tests above did show no performance deviations within failure limits during the stated test duration. Respective failure limits are described in the IEC60810.

Changes to the content of this datasheet may occur without further notification. JEDEC 46C constitutes the guideline of the change management for the device specified in this document.

Based on very short life cycle times in chip technology this component is subject to frequent adaption to the latest chip technology.

For further application related information please visit https://ams-osram.com/support/application-notes

Disclaimer

Attention please!

The information describes the type of component and shall not be considered as assured characteristics. Terms of delivery and rights to change design reserved. Due to technical requirements components may contain dangerous substances.
For information on the types in question please contact our Sales Organization.
If printed or downloaded, please find the latest version on our website.

Packing

Please use the recycling operators known to you. We can also help you – get in touch with your nearest sales office. By agreement we will take packing material back, if it is sorted. You must bear the costs of transport. For packing material that is returned to us unsorted or which we are not obliged to accept, we shall have to invoice you for any costs incurred.

Product and functional safety devices/applications or medical devices/applications

Our components are not developed, constructed or tested for the application as safety relevant component or for the application in medical devices.
Our products are not qualified at module and system level for such application.

An entire (100%) testing shall be performed after assembly of our product to the final product. Our products are not qualified at module and system level for such application. Customer is fully responsible and accountable for detection capability in case of sudden changes in electro-optical characteristics at component level.

In case buyer – or customer supplied by buyer – considers using our components in product safety devices/applications or medical devices/applications, buyer and/or customer has to inform our local sales partner immediately and we and buyer and/or customer will analyze and coordinate the customer-specific request between us and buyer and/or customer.

Please carefully read the below instructions.

WARNING: Each user bears full responsibility for making their own determination as to the suitability of our products, recommendations or advice for its own end use. Each user must identify and perform all tests and analyses necessary to ensure that its finished application incorporating our products will be safe and suitable for use under end-use conditions. We make no warranty or guarantee, express or implied, as to results obtained in end-use, nor of any design incorporating its products, recommendations or advice.

WARNING: High intensity ultraviolet-C (UV-C) radiation is emitted from this product, which is harmful to skin and eyes. Take appropriate protective measures to avoid any exposure to direct or reflected UV-C radiation.

WARNING: During operating lifetime of our UV-C product different aging mechanisms can cause failures. This may lead to a significant deviation of the function in the final product and application. Please contact us in advance for further information.

Glossary

1) **Brightness:** Brightness groups are tested at a current pulse duration of 10 ms and a tolerance of ±10 %.

2) **Reverse Operation:** Not designed for reverse operation. Continuous reverse operation can cause migration and damage of the device.

3) **Peak Wavelength:** Wavelengths are tested at a current pulse duration of 10 ms and a tolerance of ±3 nm.

4) **Forward Voltage:** Forward voltages are tested at a current pulse duration of 1 ms and a tolerance of ±0.1 V.

5) **Thermal Resistance:** Rth max is based on statistic values (6σ) used for Derating.

6) **Typical Values:** Due to the special conditions of the manufacturing processes of semiconductor devices, the typical data or calculated correlations of technical parameters can only reflect statistical figures. These do not necessarily correspond to the actual parameters of each single product, which could differ from the typical data and calculated correlations or the typical characteristic line. If requested, e.g. because of technical improvements, these typ. data will be changed without any further notice.

7) **Characteristic curve:** In the range where the line of the graph is broken, you must expect higher differences between single devices within one packing unit.

8) **Tolerance of Measure:** Unless otherwise noted in drawing, tolerances are specified with ±0.1 and dimensions are specified in mm.

9) **Tape and Reel:** All dimensions and tolerances are specified acc. IEC 60286-3 and specified in mm.

Revision History

Version	Date	Change
1.0	2022-05-12	Initial Version
1.1	2022-08-22	Applications
1.2	2022-11-22	Derating (Diagrams)
1.3	2023-11-17	Features Ordering Information Maximum Ratings Characteristics Brightness Groups Electro - Optical Characteristics (Diagrams) Derating (Diagrams)
1.4	2023-12-18	Features Electro - Optical Characteristics (Diagrams) Characteristics
1.5	2024-02-29	Ordering Information
1.6	2024-05-08	Ordering Information Brightness Groups
1.7	2024-08-05	Features Characteristics Electro - Optical Characteristics (Diagrams)
1.8	2024-09-20	Applications Ordering Information Forward Voltage Groups
1.9	2024-10-29	Features Maximum Ratings Characteristics Electro - Optical Characteristics (Diagrams) Derating (Diagrams) Dimensional Drawing Further Information Electrical Internal Circuit Notes
1.10	2024-12-09	Features Characteristics Electro - Optical Characteristics (Diagrams)
1.11	2025-03-25	Ordering Information Brightness Groups
1.12	2025-04-04	Ordering Information Characteristics Forward Voltage Groups

Revision History

Version	Date	Change
1.13	2025-06-05	Ordering Information Characteristics Forward Voltage Groups
1.14	2025-06-24	Description Certificate Logo
1.15	2025-07-22	Recommended Solder Pad
1.16	2025-12-09	Characteristics
1.17	2025-12-19	Electro - Optical Characteristics (Diagrams) Features Characteristics
1.18	2026-01-16	Recommended Solder Pad
1.19	2026-09-28	Product Image

EU RoHS and China RoHS compliant product
此产品符合欧盟 RoHS 指令的要求；
按照中国的相关法规和标准，
不含有毒有害物质或元素。

Published by ams-OSRAM AG
Tobelbader Strasse 30, 8141 Premstaetten, Austria
Phone +43 3136 500-0
ams-osram.com
© All rights reserved