OSRAM LZ4-00R608

Datasheet

Published by ams-OSRAM AG
Tobelbader Strasse 30, 8141 Premstaetten, Austria
Phone +43 3136 500-0
ams-osram.com
© All rights reserved

LED ENGIN LuxiGen™

LZ4-00R608

Industry's most robust high power ceramic package with glass lens for high performance over life.

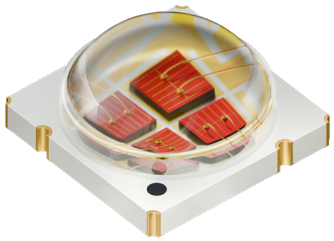

Applications

- Access control & security
- Appliances & tools
- Factory automation
- Home & building automation
- Material processing
- Medical lighting
- Robotics

Features

- Package: Ceramic package with integrated glass lens
- Chip technology: IR Thinfilm
- Typ. Radiation: 90°
- Color: λ_{peak} = 850 nm (● infrared (850 nm))
- Double stack emitter

Ordering Information

Type	Total radiant flux [1] I_F = 700 mA Φ_E	Ordering Code
LZ4-00R608-0000	3.00 ... 6.00 W	Q65115A4633

Maximum Ratings

Parameter	Symbol		Values
Operating Temperature	T_{op}	min. max.	-40 °C 125 °C
Storage Temperature	T_{stg}	min. max.	-40 °C 125 °C
Junction Temperature [2)]	T_j	max.	145 °C
Forward Current [2)]	I_F	max.	1000 mA
Forward Current pulsed t ≤ 150 µs; D ≤ 0.1 ; T_C = 25 °C	$I_{F\ pulse}$	max.	5000 mA
ESD withstand voltage acc. ANSI/ESDA/JEDEC JS-001 (HBM, Class 0)	V_{ESD}		ESD sensitive device
Reverse voltage [3)]	V_R		Not designed for reverse operation

Characteristics

I_F = 700 mA; T_C = 25 °C; all chips operated in series

Parameter	Symbol		Values
Total radiant flux [4]	Φ_E	typ.	4.40 W
Peak Wavelength [5] I_F = 700 mA	λ_{peak}	min. typ. max.	835 nm 850 nm 875 nm
Viewing angle at 50% I_V	2φ	typ.	100 °
Forward Voltage [6][4] I_F = 700 mA	V_F	min. typ. max.	10.80 V 12.34 V 14.80 V
Reverse current [3]	I_R		Not designed for reverse operation
Electrical thermal resistance junction/case	$R_{thJC\ elec.}$	typ.	2.8 K / W

Brightness Groups

Group	Total radiant flux [1] I_F = 700 mA min. Φ_E	Total radiant flux [1] I_F = 700 mA max. Φ_E
S	3.00 W	3.80 W
T	3.80 W	4.80 W
U	4.80 W	6.00 W

Wavelength Groups

Group	Peak Wavelength [5] I_F = 700 mA min. λ_{peak}	Peak Wavelength [5] I_F = 700 mA max. λ_{peak}
F08	835 nm	875 nm

Group Name on Label

Example: S-F08

Brightness	Wavelength
S	F08

Relative Spectral Emission [4)]

$I_{rel} = f(\lambda)$; $I_F = 700$ mA; $T_C = 25$ °C

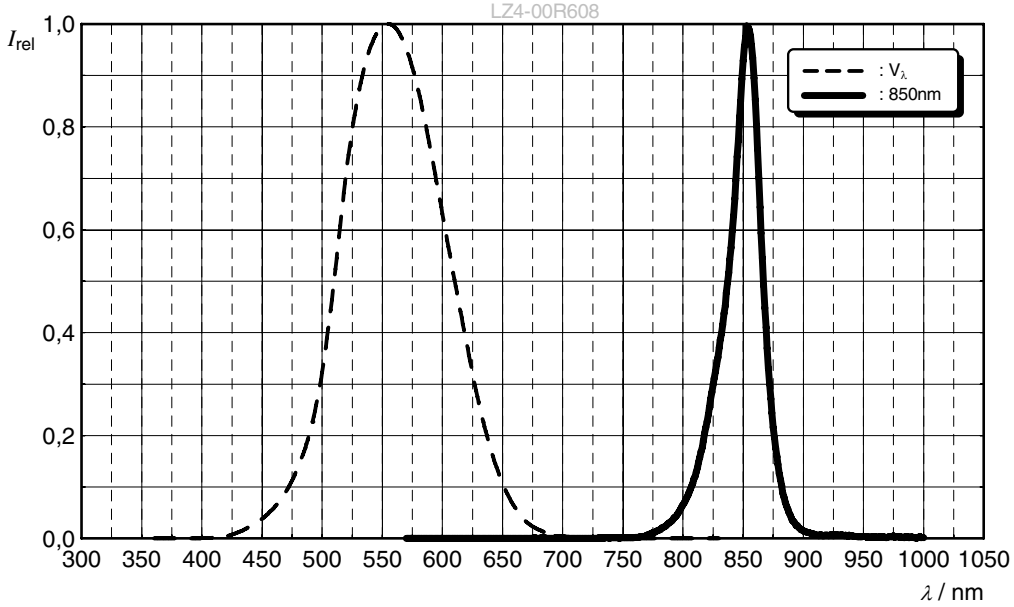

Radiation Characteristics [4)]

$I_{rel} = f(\varphi)$; $T_C = 25$ °C

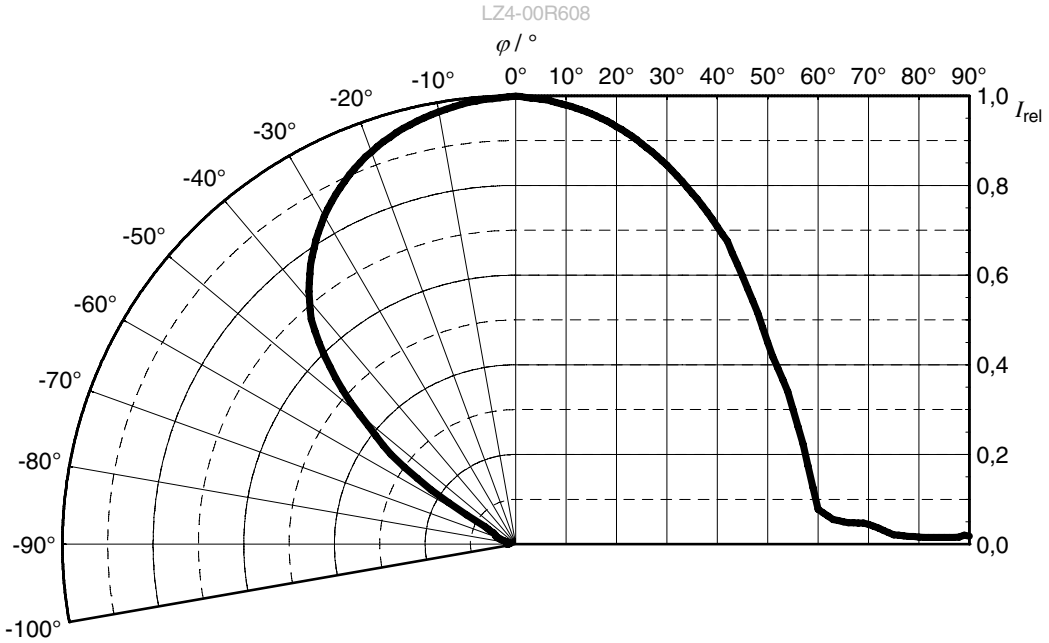

Forward current [4)]

$I_F = f(V_F)$; T_C = 25 °C

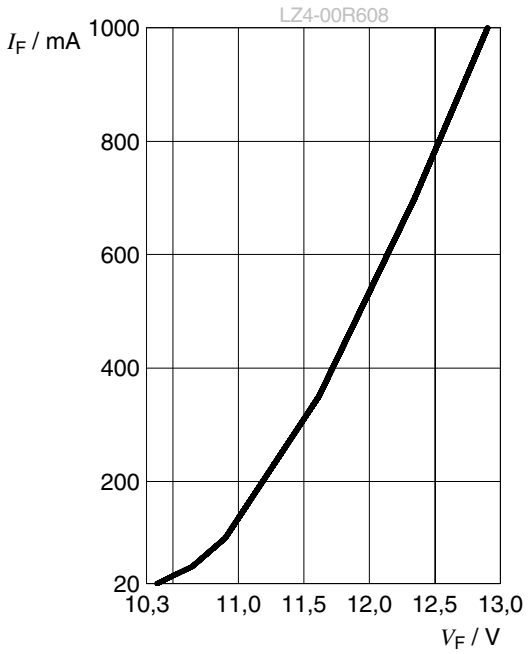

Relative Radiant Power [4), 7)]

$\Phi_E/\Phi_E(700\ mA) = f(I_F)$; T_C = 25 °C

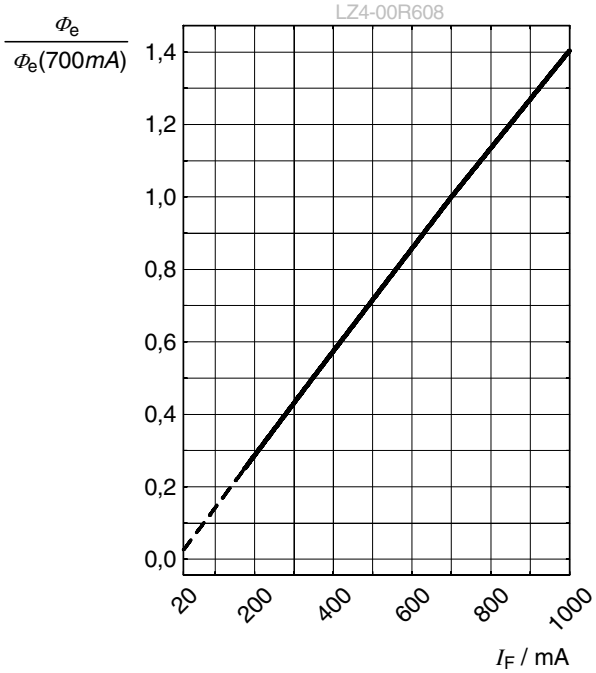

Peak Wavelength [4)]

$\Delta\lambda_{peak} = \lambda_{peak} - \lambda_{peak}(25\ °C) = f(T_j)$; I_F = 700 mA

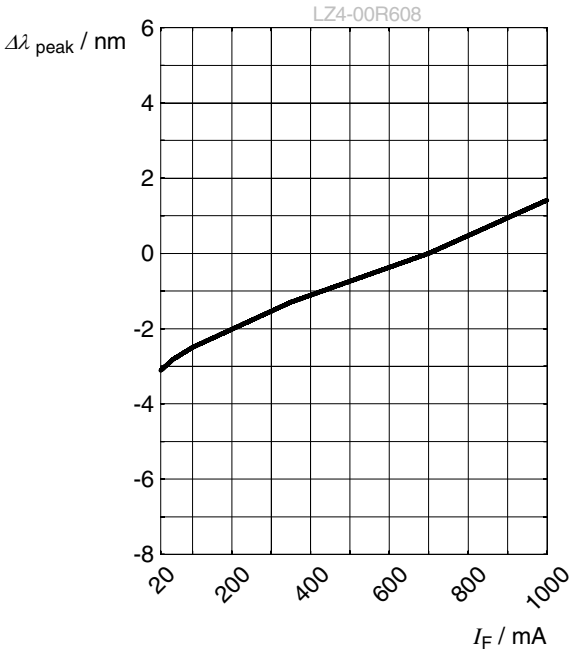

Forward Voltage [4)]

$\Delta V_F = V_F - V_F(25\ °C) = f(T_j)$; $I_F = 700$ mA

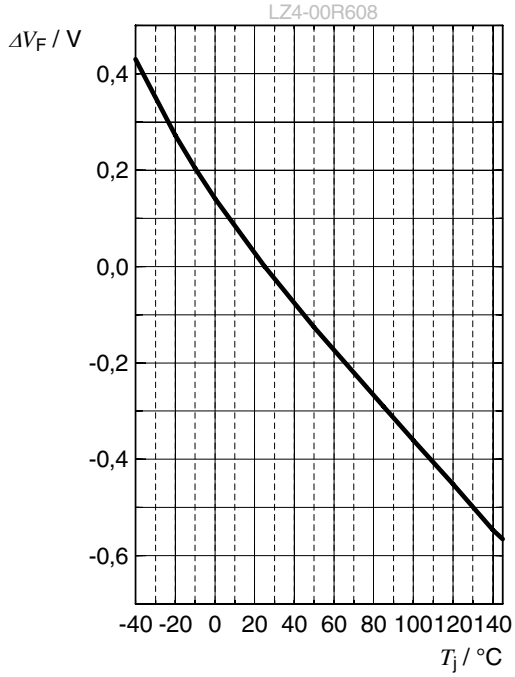

Relative Radiant Power [4)]

$\Phi_E/\Phi_E(25\ °C) = f(T_j)$; $I_F = 700$ mA

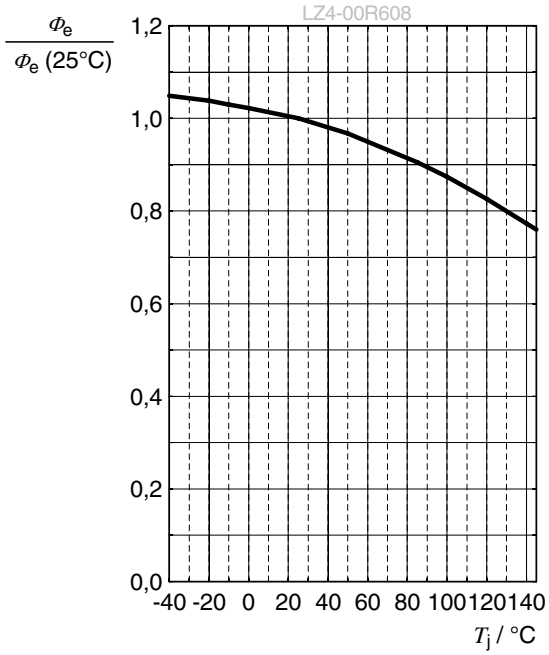

Peak Wavelength [4)]

$\Delta\lambda_{peak} = \lambda_{peak} - \lambda_{peak}(25\ °C) = f(T_j)$; $I_F = 700$ mA

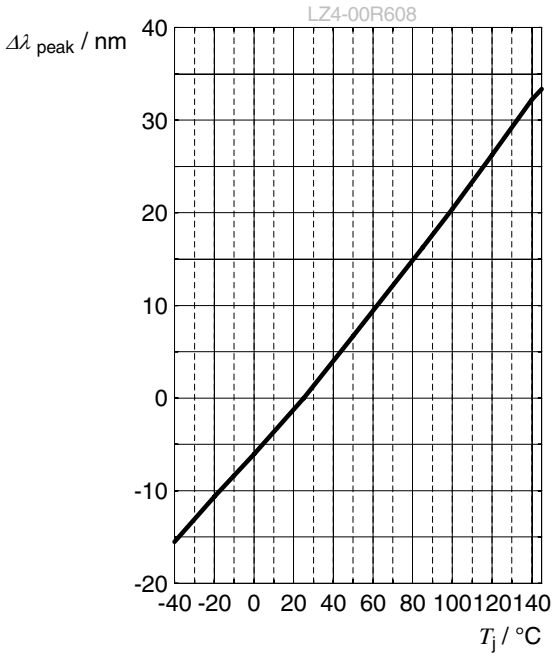

Max. Permissible Forward Current [8)]

$I_F = f(T)$

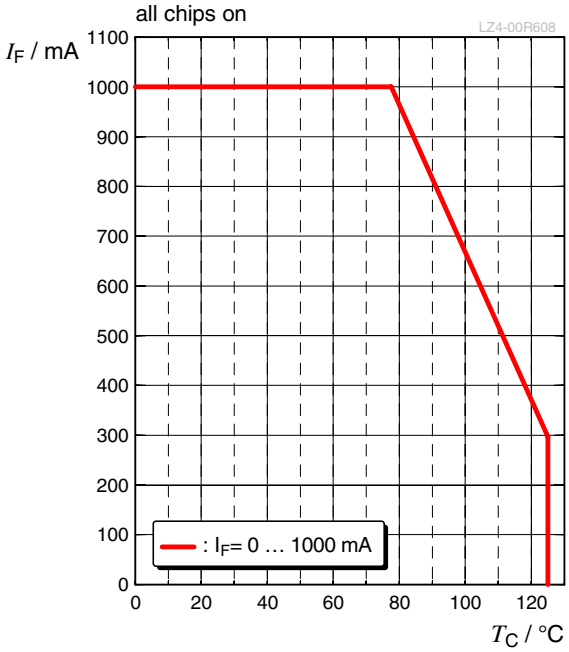

Dimensional Drawing [9)]

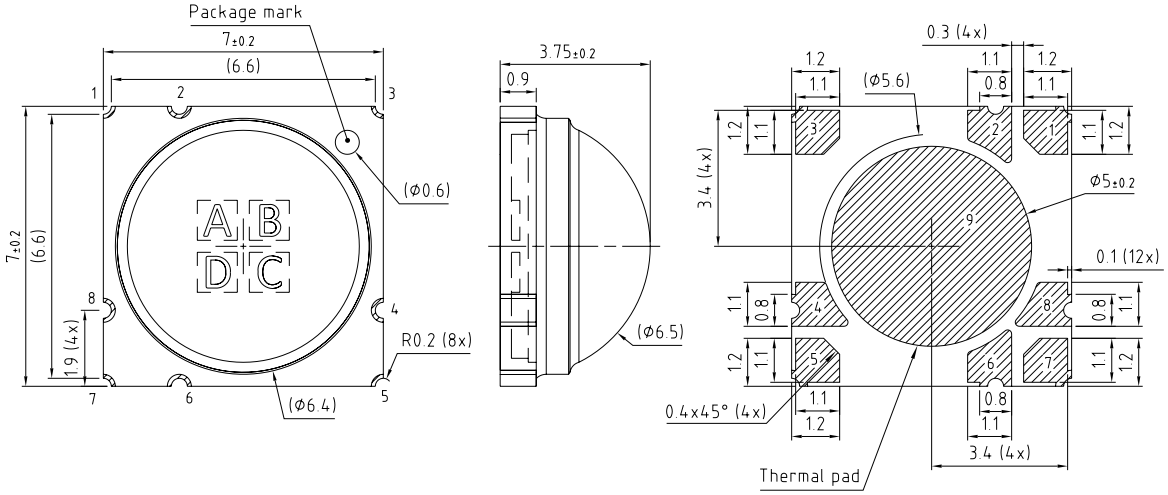

General tolerance ±0.1
Pad finish Gold

C67062-A0375-A18..-04

Further Information:

Approximate Weight: 263.0 mg

Electrical Internal Circuit

Pin Out		
Pad	Die	Function
1	A	Anode
2	A	Cathode
3	B	Anode
4	B	Cathode
5	C	Anode
6	C	Cathode
7	D	Anode
8	D	Cathode
9	n/a	Thermal

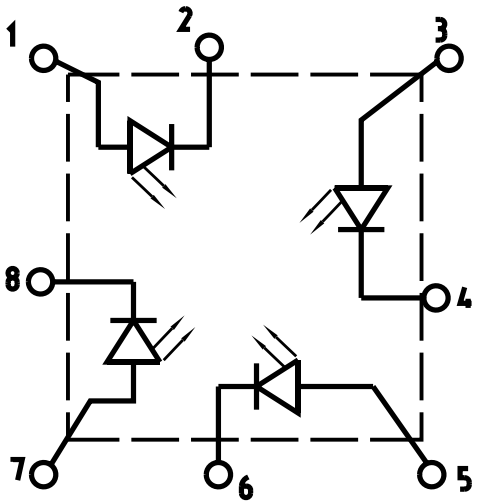

Recommended Solder Pad [9]

Non-pedestal MCPCB Design

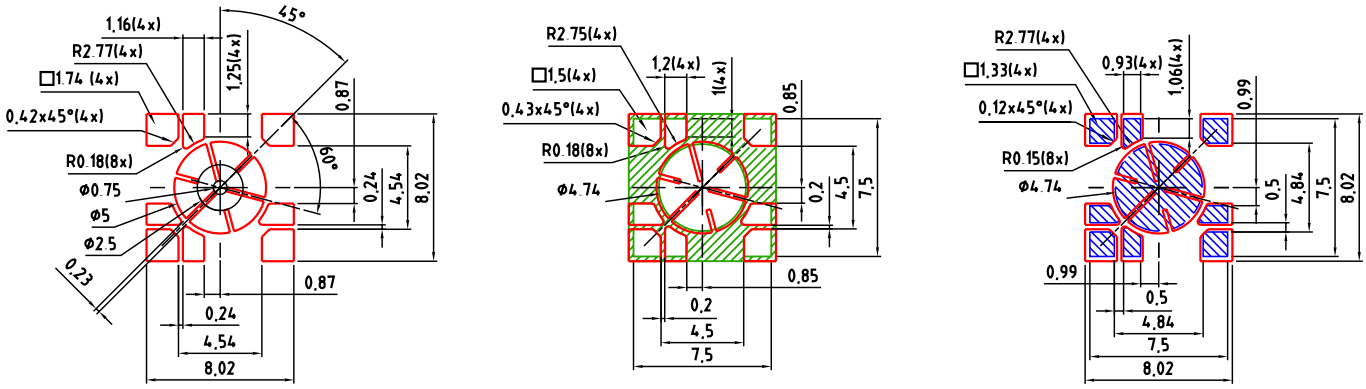

Pedestal MCPCB Design

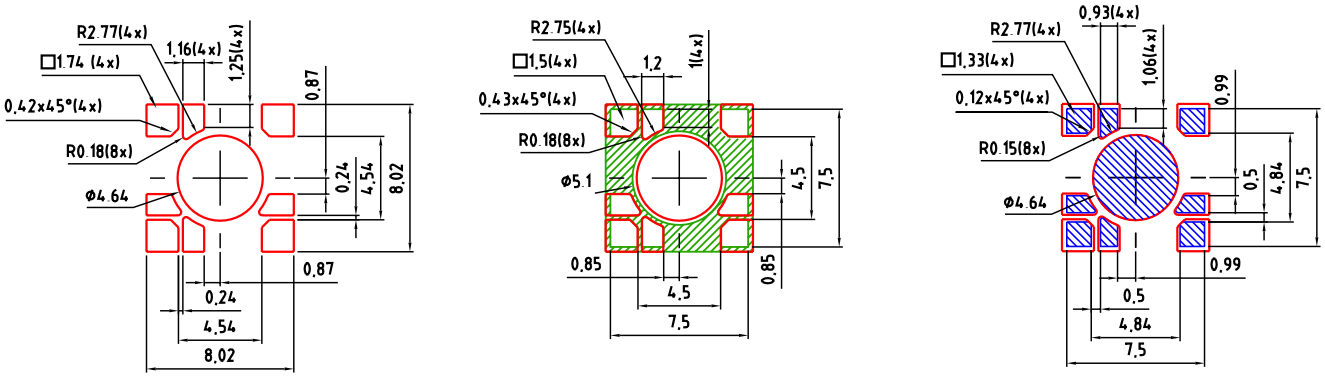

foot print

solder resist

solder stencil
recommended stencil
thickness 200µm

Component Location on Pad

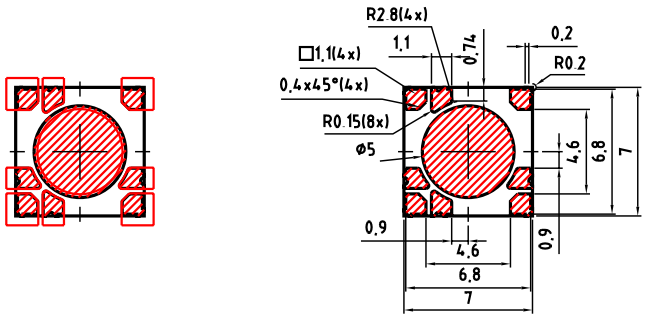

E062.3010.291-01

1. For superior solder joint connectivity results we recommend soldering under standard nitrogen atmosphere.
2. Package not suitable for ultra sonic cleaning.
3. Pedestal MCPCB allows the emitter thermal slug to be soldered directly to the metal core of the MCPCB. Such MCPCB eliminate the high thermal resistance dielectric layer that standard MCPCB technologies use in between the emitter thermal slug and the metal core of the MCPCB, thus lowering the overall system thermal resistance.
4. X-ray sample monitoring for solder voids underneath the emitter thermal slug is recommended. The total area covered by solder voids should be less than 20% of the total emitter thermal slug area. Excessive solder voids will increase the emitter to MCPCB thermal resistance and may lead to higher failure rates due to thermal over stress.

Reflow Soldering Profile

Product complies to MSL Level 1 acc. to JEDEC J-STD-020E

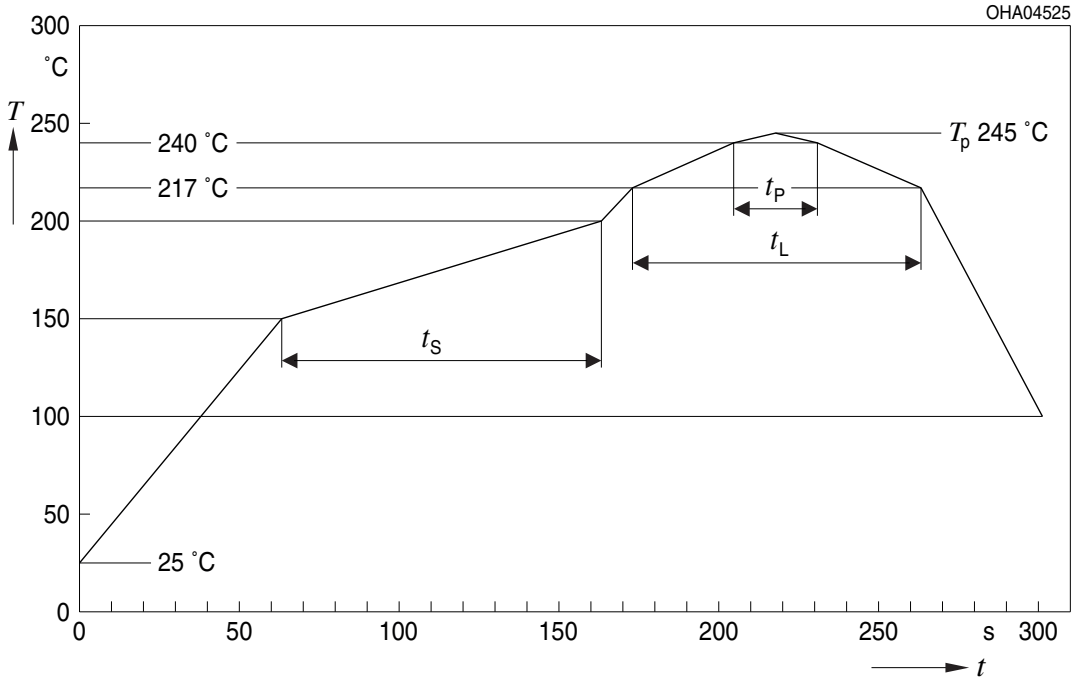

Profile Feature	Symbol	Pb-Free (SnAgCu) Assembly			Unit
		Minimum	Recommendation	Maximum	
Ramp-up rate to preheat*) 25 °C to 150 °C			2	3	K/s
Time t_S T_{Smin} to T_{Smax}	t_S	60	100	120	s
Ramp-up rate to peak*) T_{Smax} to T_P			2	3	K/s
Liquidus temperature	T_L		217		°C
Time above liquidus temperature	t_L		80	100	s
Peak temperature	T_P		245	250	°C
Time within 5 °C of the specified peak temperature T_P - 5 K	t_P	10	20	30	s
Ramp-down rate* T_P to 100 °C			3	4	K/s
Time 25 °C to T_P				480	s

All temperatures refer to the center of the package, measured on the top of the component
* slope calculation DT/Dt: Dt max. 5 s; fulfillment for the whole T-range

Taping [9]

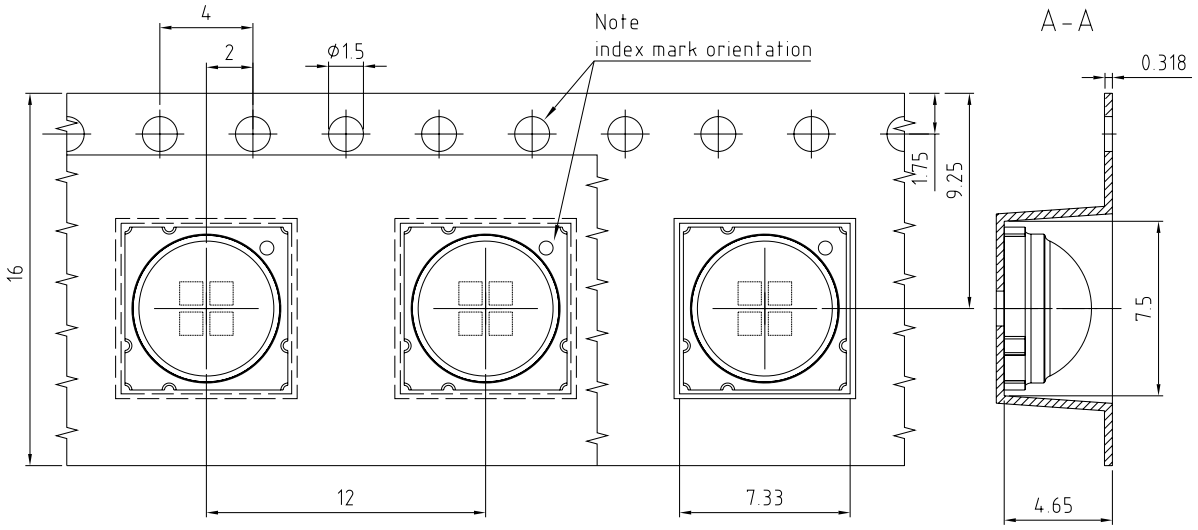

C67062-A0375-B4-02

Tape and Reel [10)]

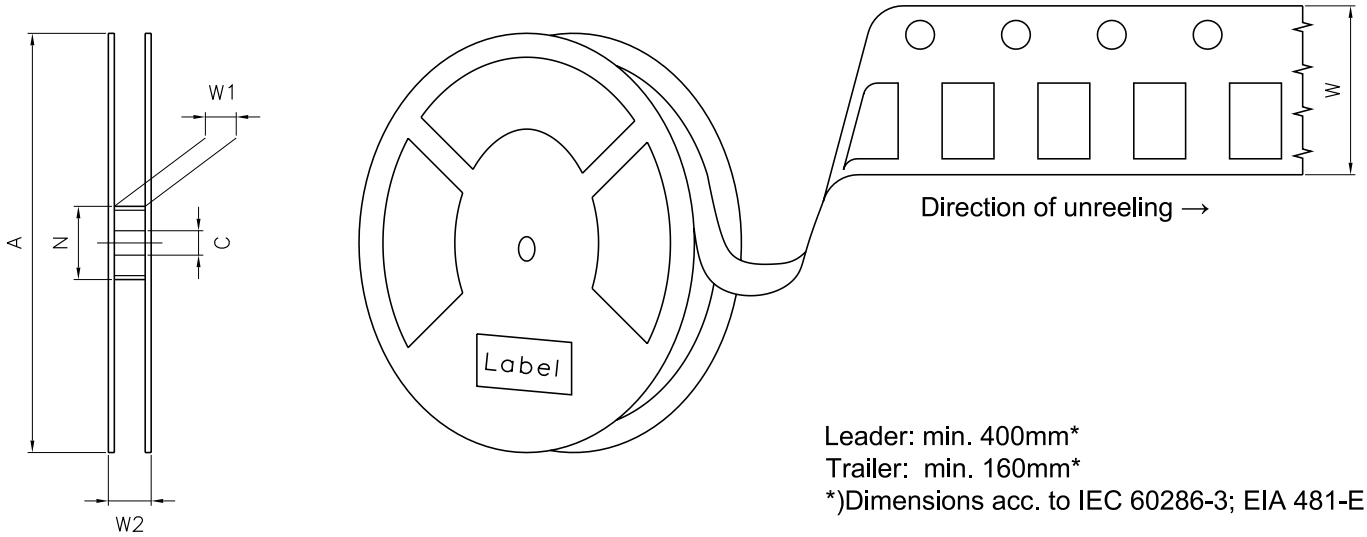

Leader: min. 400mm*
Trailer: min. 160mm*
*)Dimensions acc. to IEC 60286-3; EIA 481-E

Reel Dimensions

A	W	N_{min}	W_1	$W_{2\,max}$	Pieces per PU
180 mm	16 + 0.3 / - 0.1 mm	60/100 mm	16.4 + 2 mm	22.4 mm	250

Barcode-Product-Label (BPL)

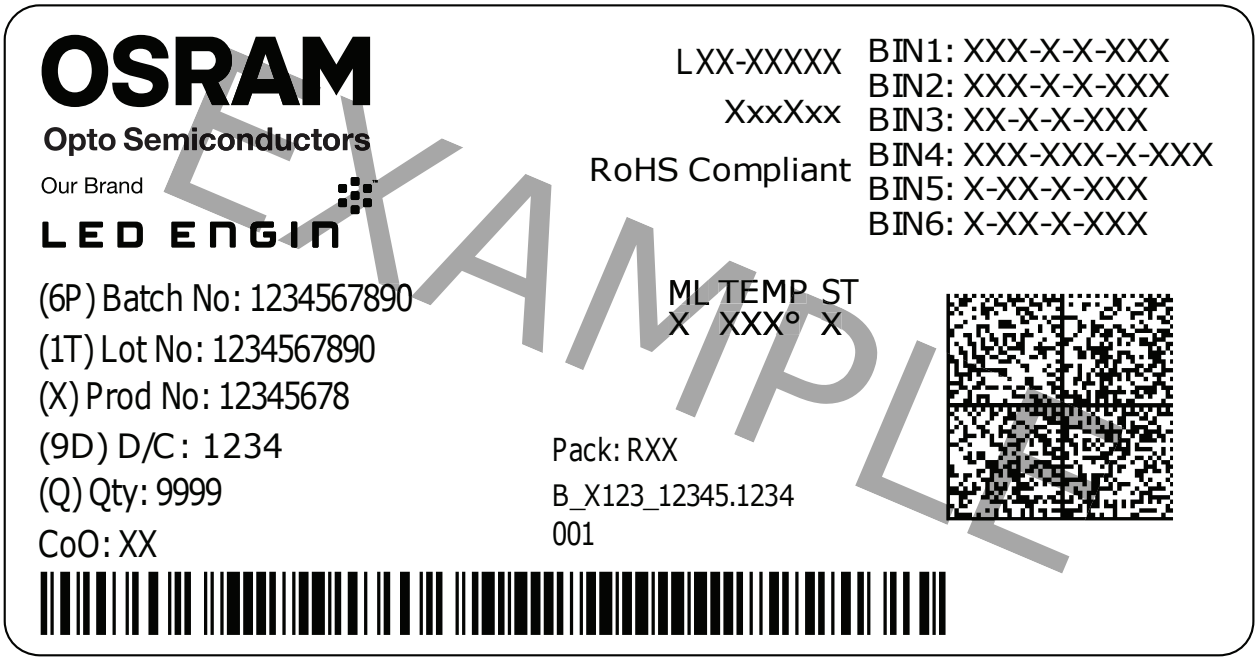

Notes

The evaluation of eye safety occurs according to the standard IEC 62471:2006 (photo biological safety of lamps and lamp systems). Within the risk grouping system of this IEC standard, the device specified in this data sheet fall into the class moderate risk (exposure time 0.25 s). Under real circumstances (for exposure time, conditions of the eye pupils, observation distance), it is assumed that no endangerment to the eye exists from these devices. As a matter of principle, however, it should be mentioned that intense light sources have a high secondary exposure potential due to their blinding effect. When looking at bright light sources (e.g. headlights), temporary reduction in visual acuity and afterimages can occur, leading to irritation, annoyance, visual impairment, and even accidents, depending on the situation.

Subcomponents of this device contain, in addition to other substances, metal filled materials including silver. Metal filled materials can be affected by environments that contain traces of aggressive substances. Therefore, we recommend that customers minimize device exposure to aggressive substances during storage, production, and use. Devices that showed visible discoloration when tested using the described tests above did show no performance deviations within failure limits during the stated test duration. Respective failure limits are described in the IEC60810.

Tapes and reels are shipped in airtight bags in order to reduce the onset of silver tarnish. We recommend bags only be opened when ready to use emitters. Partially used reels or trays should be stored in airtight bags or in storage purged with nitrogen.

Based on very short life cycle times in chip technology this component is subject to frequent adaption to the latest chip technology.

Changes to the content of this datasheet may occur without further notification. JEDEC 46C constitutes the guideline of the change management for the device specified in this document.

For further application related information please visit https://ams-osram.com/support/application-notes

Disclaimer

Attention please!

The information describes the type of component and shall not be considered as assured characteristics. Terms of delivery and rights to change design reserved. Due to technical requirements components may contain dangerous substances.
For information on the types in question please contact our Sales Organization.
If printed or downloaded, please find the latest version on our website.

Packing

Please use the recycling operators known to you. We can also help you – get in touch with your nearest sales office. By agreement we will take packing material back, if it is sorted. You must bear the costs of transport. For packing material that is returned to us unsorted or which we are not obliged to accept, we shall have to invoice you for any costs incurred.

Product and functional safety devices/applications or medical devices/applications

Our components are not developed, constructed or tested for the application as safety relevant component or for the application in medical devices.
Our products are not qualified at module and system level for such application.

In case buyer – or customer supplied by buyer – considers using our components in product safety devices/ applications or medical devices/applications, buyer and/or customer has to inform our local sales partner immediately and we and buyer and /or customer will analyze and coordinate the customer-specific request between us and buyer and/or customer.

Glossary

1) **Brightness:** Brightness groups are tested at a current pulse duration of 10 ms and a tolerance of ±10 %.

2) **Operating Conditions:** Operating conditions according DC-derating (Max. Permissible Forward Current)

3) **Reverse Operation:** Not designed for reverse operation. Continuous reverse operation can cause migration and damage of the device.

4) **Typical Values:** Due to the special conditions of the manufacturing processes of semiconductor devices, the typical data or calculated correlations of technical parameters can only reflect statistical figures. These do not necessarily correspond to the actual parameters of each single product, which could differ from the typical data and calculated correlations or the typical characteristic line. If requested, e.g. because of technical improvements, these typ. data will be changed without any further notice.

5) **Peak Wavelength:** Wavelengths are tested at a current pulse duration of 10 ms and a tolerance of ±2 nm.

6) **Forward Voltage:** Forward voltages are tested at a current pulse duration of 10 ms and a tolerance of ±0.1 V.

7) **Characteristic curve:** In the range where the line of the graph is broken, you must expect higher differences between single devices within one packing unit.

8) **Thermal Resistance:** Rth max is based on statistic values (6σ) used for Derating.

9) **Tolerance of Measure:** Unless otherwise noted in drawing, tolerances are specified with ±0.1 and dimensions are specified in mm.

10) **Tape and Reel:** All dimensions and tolerances are specified acc. IEC 60286-3 and specified in mm.

Revision History

Version	Date	Change
1.6	2021-08-05	New Layout
1.7	2023-11-09	New Layout Applications Dimensional Drawing
1.8	2026-10-01	Product Image Ordering Information Characteristics Brightness Groups Group Name on Label Electro - Optical Characteristics (Diagrams) Dimensional Drawing Taping

EU RoHS and China RoHS compliant product
此产品符合欧盟 RoHS 指令的要求；
按照中国的相关法规和标准，
不含有毒有害物质或元素。

Published by ams-OSRAM AG
Tobelbader Strasse 30, 8141 Premstaetten, Austria
Phone +43 3136 500-0
ams-osram.com
© All rights reserved