OSRAM KEW M SFS P1 T01

Datasheet

Published by ams-OSRAM AG
Tobelbader Strasse 30, 8141 Premstaetten, Austria
Phone +43 3136 500-0
ams-osram.com
© All rights reserved

OSRAM

OSLON™ PX 24

KEW M SFS P1 T01

The OSLON PX24 is a compact multipixel array of LEDs individually addressable for direct projection of light patterns, providing uniformity in brightness along the array, thermal stability and efficacy, mechanical robustness.

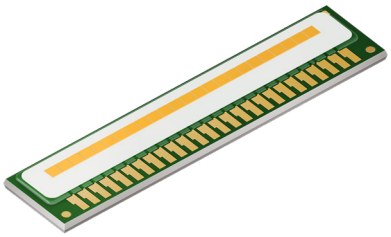

Applications

- Adaptive driving beam

Features

- Typ. Radiation: 120° (Lambertian emitter)
- Corrosion Robustness Class: 3B
- ESD: 8 kV acc. to ANSI/ESDA/JEDEC JS-001 (HBM, Class 3B)
- Package: Compact multipixel array on Submount board technology
- Combination of 50 µm narrow gap and high contrast supports the precision on the ADB projection
- Chip technology: Compact UX:3, 1 mm² size

Ordering Information

Type	Luminous Flux [1] I_F = 1000 mA Φ_V	Ordering Code
KEWMSFSP1T01-S45S56-4L14L25L25L3	395 ... 460 lm	Q65115A3811

Maximum Ratings

All values are referring to single chip (out of the 24 in the array)

Parameter	Symbol		Values
Operating Temperature [2]	T_{op}	min. max.	-40 °C 135 °C
Junction Temperature	T_j	max.	150 °C
Case Temperature	T_{case}	max.	135 °C
Forward current T_C = 25 °C	I_F	min. max.	50 mA 1200 mA
ESD withstand voltage acc. to ANSI/ESDA/JEDEC JS-001 (HBM, Class 3B)	V_{ESD}		8 kV
Reverse current [3]	I_R	max.	200 mA

Characteristics

I_F = 1000 mA; T_C = 25 °C All values are referring to single chip (out of the 24 in the array)

Parameter	Symbol		Values
Chromaticity Coordinate [4]	Cx	typ.	0.320
	Cy	typ.	0.334
Viewing angle at 50% I_V	2φ	typ.	120 °
Radiating surface	A_{color}	typ.	1.06 mm²
Forward Voltage [5] I_F = 1000 mA	V_F	min.	2.80 V
		typ.	3.20 V
		max.	3.40 V
Reverse voltage (ESD device)	$V_{R\ ESD}$	min.	45 V
Reverse voltage [3] I_R = 20 mA	V_R	max.	1.2 V
Real thermal resistance junction/solderpoint [6]	$R_{thJS\ real}$	typ.	7.5 K / W
		max.	6.0 K / W

Brightness Groups

Group	Luminous Flux [1] I_F = 1000 mA min. Φ_V	Luminous Flux [1] I_F = 1000 mA max. Φ_V
S45	395 lm	435 lm
S56	415 lm	460 lm

Chromaticity Coordinate Groups

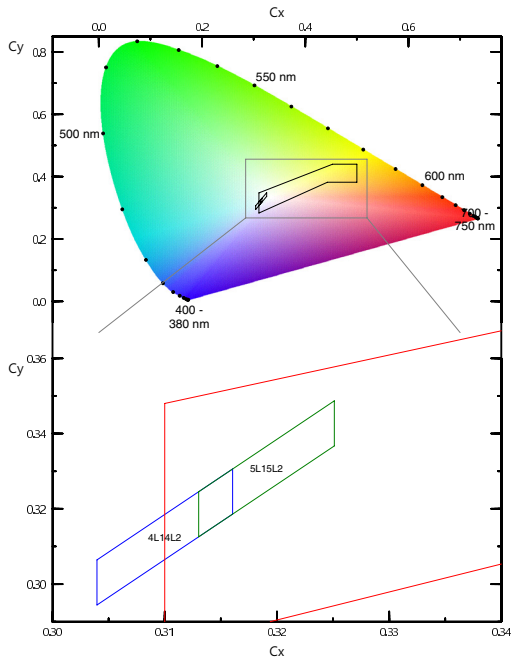

Chromaticity Coordinate Groups

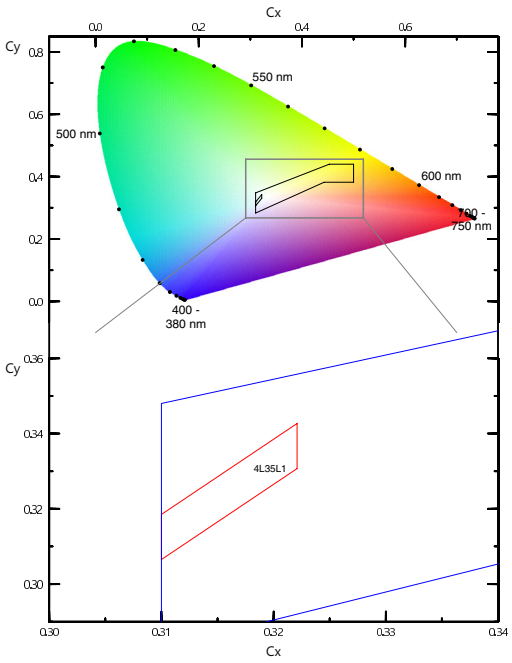

Chromaticity Coordinate Groups

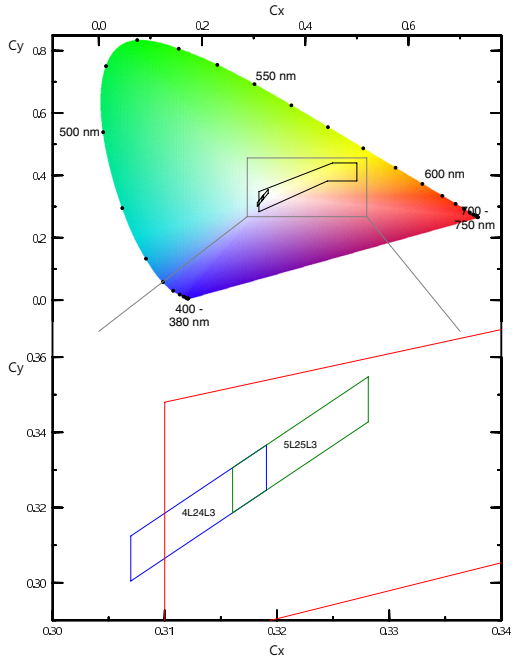

Chromaticity Coordinate Groups [4)]

All values are referring to single chip (out of the 24 in the array)

Group	Cx	Cy
4L14L2	0.3040	0.2944
	0.3040	0.3064
	0.3161	0.3306
	0.3161	0.3186
4L24L3	0.3070	0.3005
	0.3070	0.3125
	0.3191	0.3366
	0.3191	0.3246

Group	Cx	Cy
4L35L1	0.3100	0.3065
	0.3100	0.3185
	0.3221	0.3427
	0.3221	0.3307
5L15L2	0.3130	0.3126
	0.3130	0.3245
	0.3251	0.3487
	0.3251	0.3367

Group	Cx	Cy
5L25L3	0.3161	0.3186
	0.3161	0.3306
	0.3281	0.3548
	0.3281	0.3428

Group Name on Label

Example: S45-4L14L2

Brightness	Color Chromaticity
S45	4L14L2

Relative Spectral Emission [7)]

$\Phi_{rel} = f(\lambda)$; I_F = 1000 mA; T_C = 25 °C

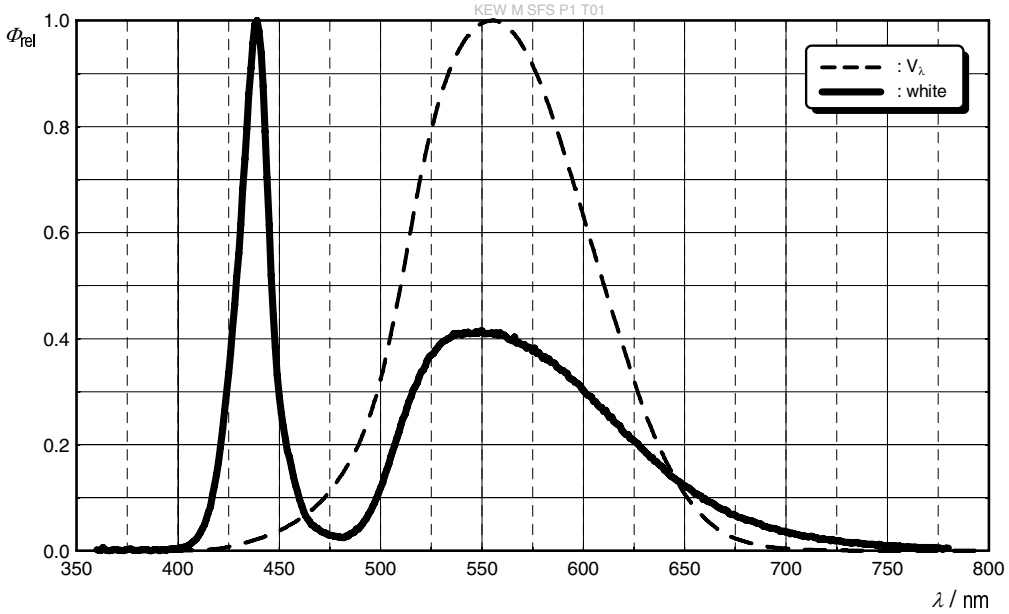

Radiation Characteristics [7)]

$I_{rel} = f(\varphi)$; T_C = 25 °C

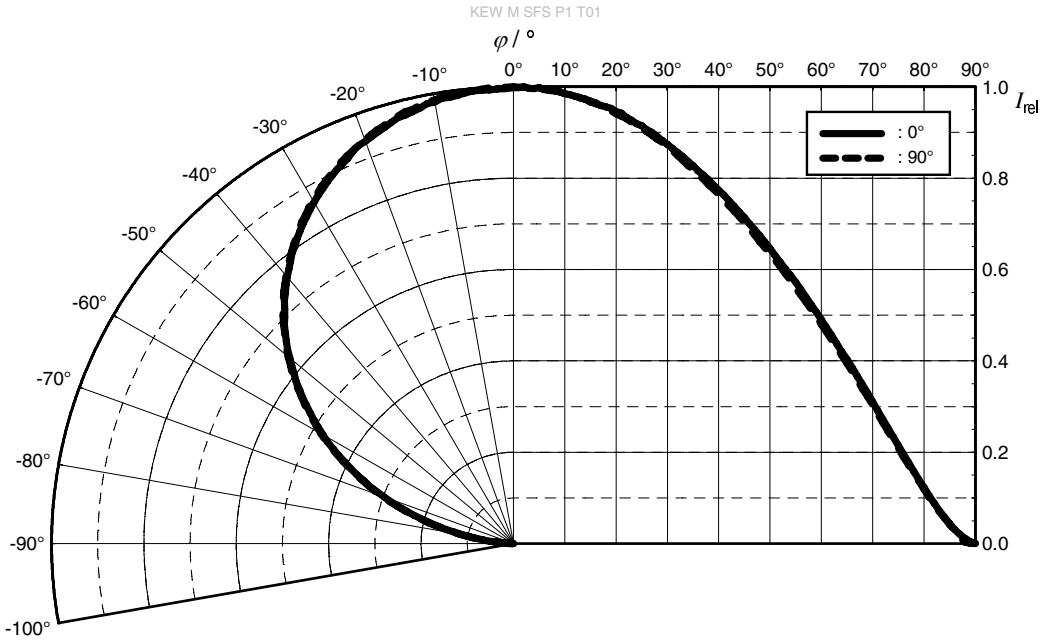

Forward current [7]

$I_F = f(V_F)$; T_C = 25 °C

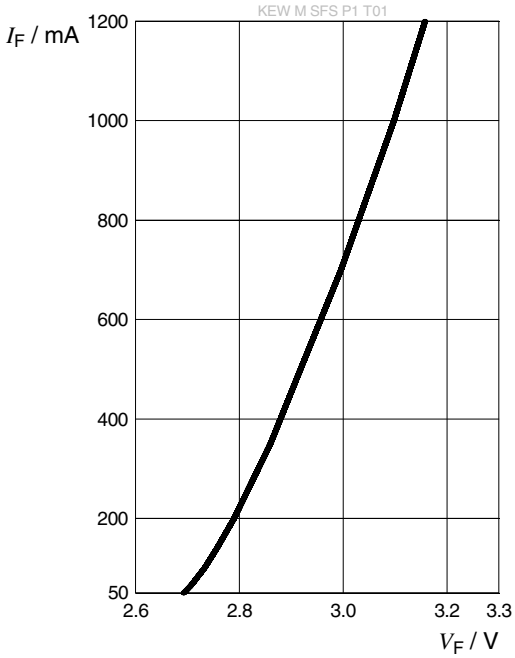

Relative Luminous Flux [7], [8]

$\Phi_v/\Phi_v(1000\ mA) = f(I_F)$; T_C = 25 °C

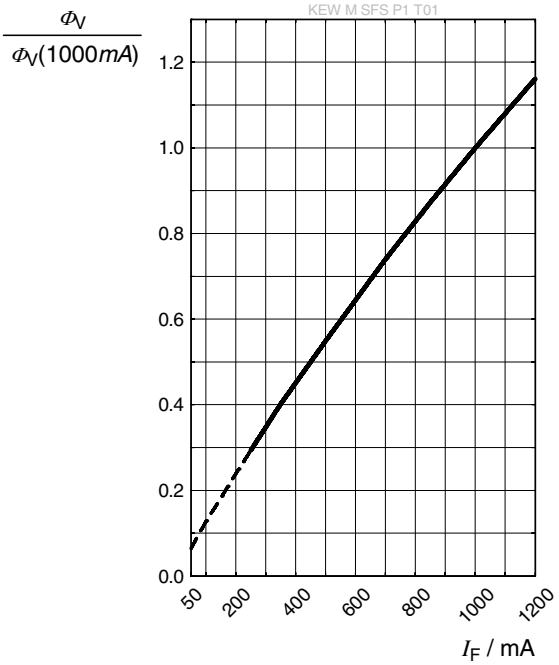

Chromaticity Coordinate Shift [7]

$\Delta Cx, \Delta Cy = f(I_F)$; T_C = 25 °C

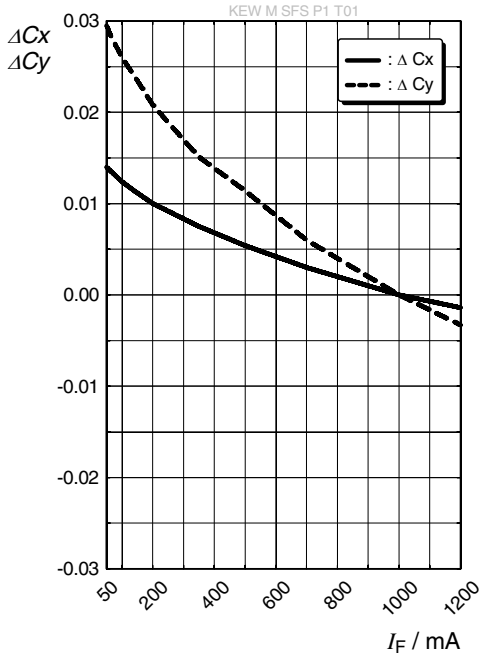

Forward Voltage [7)]

$\Delta V_F = V_F - V_F(25\ °C) = f(T_j);\ I_F = 1000\ mA$

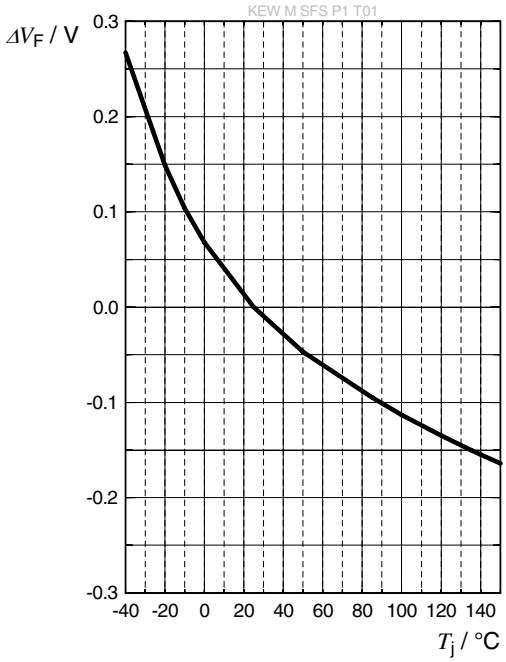

Relative Luminous Flux [7)]

$\Phi_v/\Phi_v(25\ °C) = f(T_j);\ I_F = 1000\ mA$

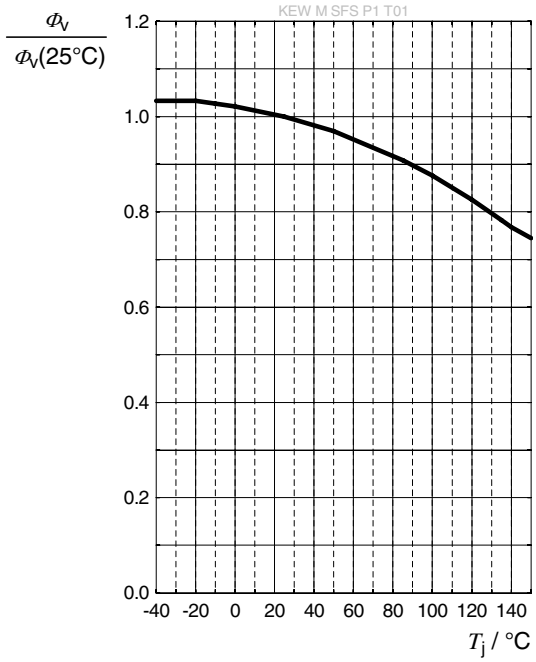

Chromaticity Coordinate Shift [7)]

$\Delta Cx, \Delta Cy = f(T_j);\ I_F = 1000\ mA$

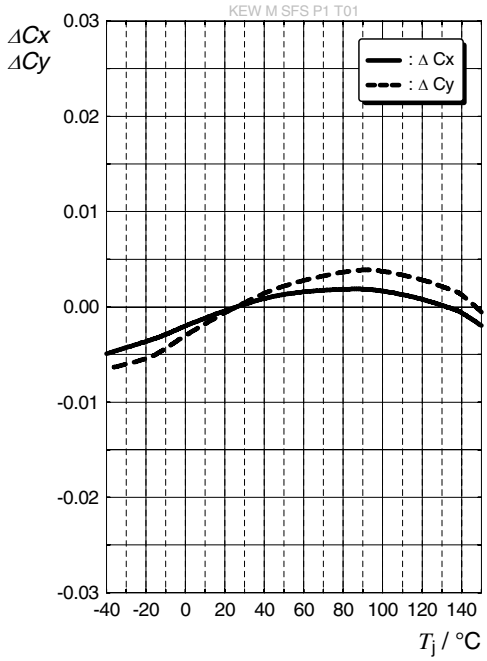

Dimensional Drawing [9)]

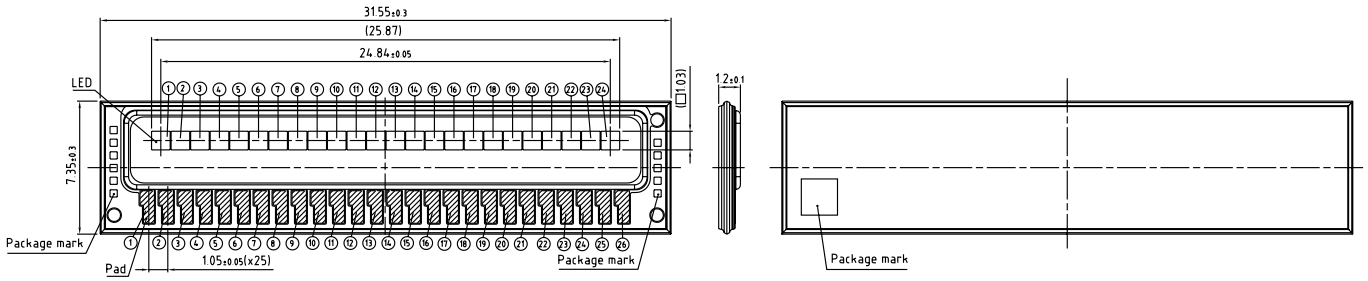

general tolerance ±0.15
Lead finish Au

Polarity indication			Polarity indication		
Pad no.	Cathode	Anode	Pad no.	Cathode	Anode
1	LED 1	NA	14	LED 13	NA
2	LED 2	LED 1	15	LED 14	LED 13
3	LED 3	LED 2	16	LED 15	LED 14
4	LED 4	LED 3	17	LED 16	LED 15
5	LED 5	LED 4	18	LED 17	LED 16
6	LED 6	LED 5	19	LED 18	LED 17
7	LED 7	LED 6	20	LED 19	LED 18
8	LED 8	LED 7	21	LED 20	LED 19
9	LED 9	LED 8	22	LED 21	LED 20
10	LED 10	LED 9	23	LED 22	LED 21
11	LED 11	LED 10	24	LED 23	LED 22
12	LED 12	LED 11	25	LED 24	LED 23
13	NA	LED 12	26	NA	LED 24

C67062-A0542-A1-07

Further Information:

Approximate Weight: 620.0 mg

Corrosion test: Class: 3B
Test condition: 40°C / 90 % RH / 15 ppm H_2S / 14 days (stricter than IEC 60068-2-43)

ESD advice: The device is protected by ESD device which is connected in parallel to the Chip.

Electrical Internal Circuit

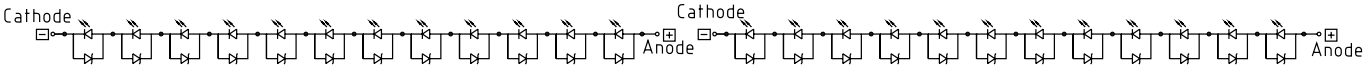

Taping [9)]

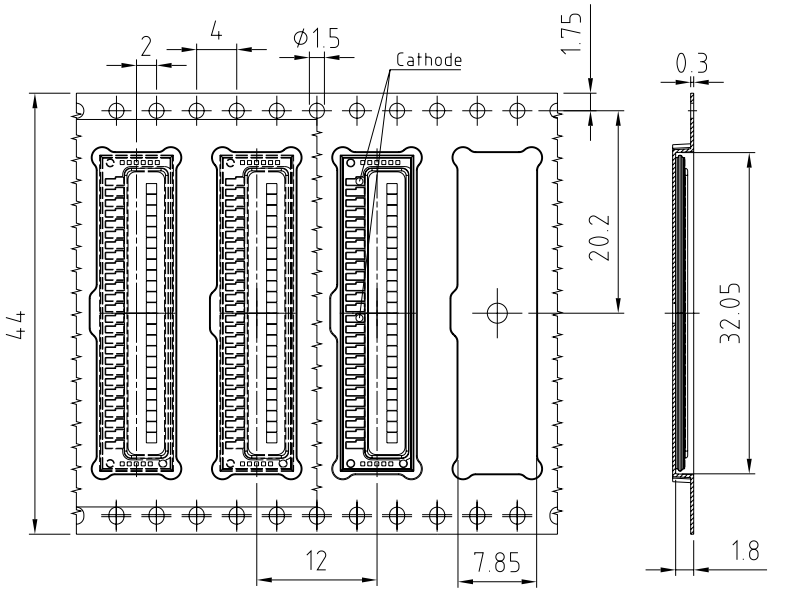

C67062-A0542-B16-04

Tape and Reel [10)]

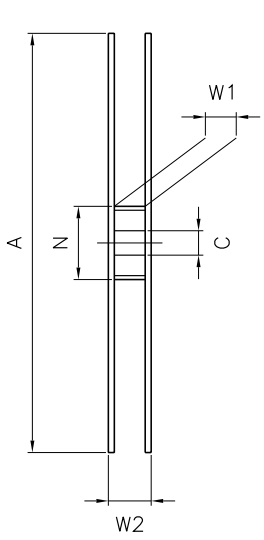

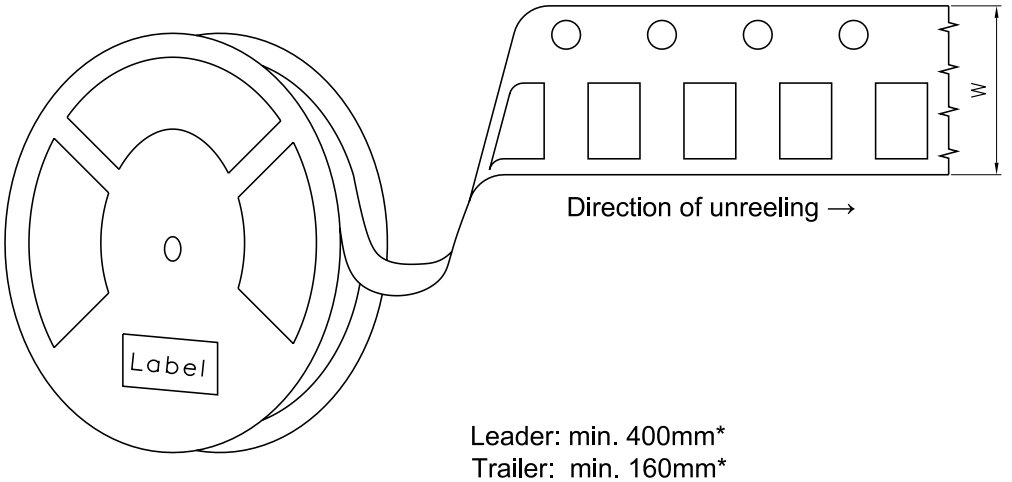

Leader: min. 400mm*
Trailer: min. 160mm*
*)Dimensions acc. to IEC 60286-3; EIA 481-E

Reel Dimensions

A	W	N_{min}	W_1	$W_{2\,max}$	Pieces per PU
330 mm	44 + 0.3 / - 0.3 mm	174 mm	44.4 + 2 mm	50.4 mm	500

Barcode-Product-Label (BPL)

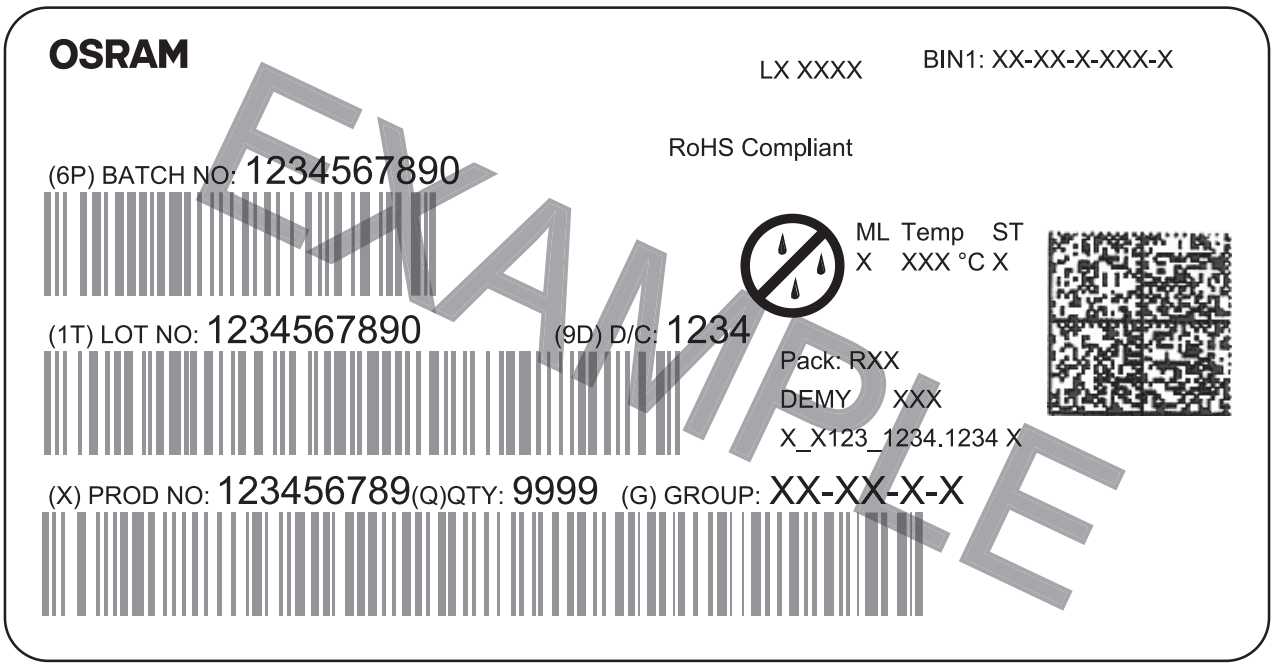

OHA04563

Dry Packing Process and Materials [9)]

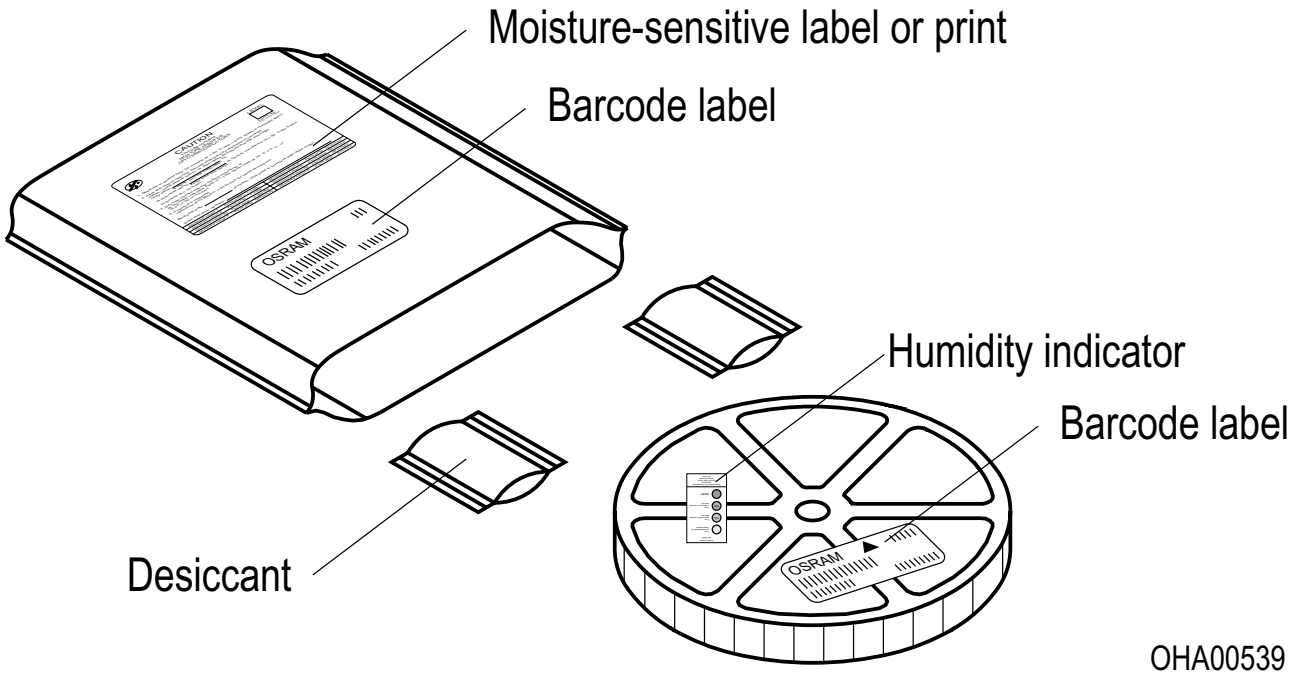

OHA00539

Moisture-sensitive product is packed in a dry bag containing desiccant and a humidity card according JEDEC-STD-033.

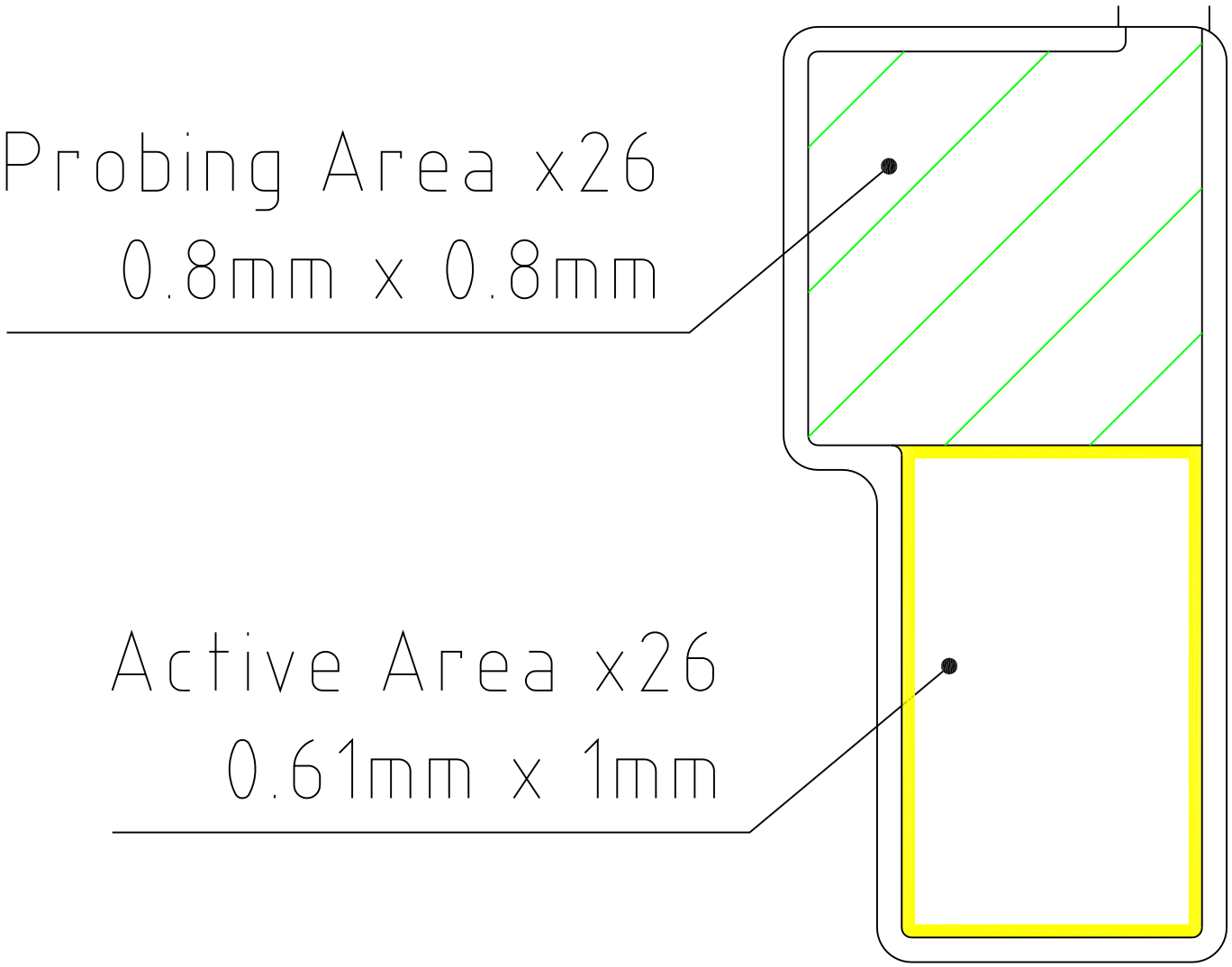

wire bond scheme:
Active area = bond area
Probing Area = used by AMS Osram

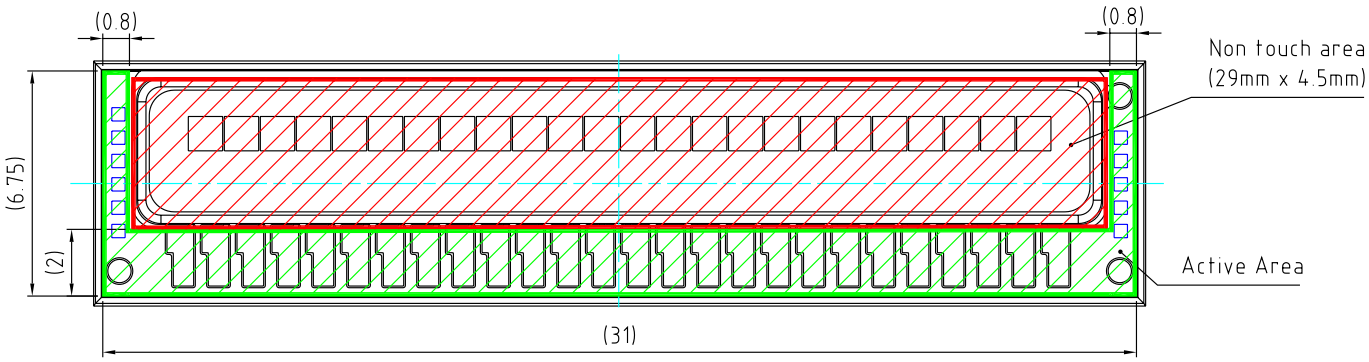

Area free of pressure scheme:
Active area = Allowed to pick and place
Non touch area = used by AMS Osram

Notes

The evaluation of eye safety occurs according to the standard IEC 62471:2006 (photo biological safety of lamps and lamp systems). Within the risk grouping system of this IEC standard, the device specified in this data sheet fall into the class **high risk (exposure time less then 0.25 s)**. Under real circumstances (for exposure time, conditions of the eye pupils, observation distance), it is assumed that no endangerment to the eye exists from these devices. As a matter of principle, however, it should be mentioned that intense light sources have a high secondary exposure potential due to their blinding effect. When looking at bright light sources (e.g. headlights), temporary reduction in visual acuity and afterimages can occur, leading to irritation, annoyance, visual impairment, and even accidents, depending on the situation.

Subcomponents of this device contain, in addition to other substances, metal filled materials including silver. Metal filled materials can be affected by environments that contain traces of aggressive substances. Therefore, we recommend that customers minimize device exposure to aggressive substances during storage, production, and use. Devices that showed visible discoloration when tested using the described tests above did show no performance deviations within failure limits during the stated test duration. Respective failure limits are described in the IEC60810.

For further application related information please visit https://ams-osram.com/support/application-notes

Disclaimer

Attention please!

The information describes the type of component and shall not be considered as assured characteristics.
Terms of delivery and rights to change design reserved. Due to technical requirements components may contain dangerous substances.
For information on the types in question please contact our Sales Organization.
If printed or downloaded, please find the latest version on our website.

Packing

Please use the recycling operators known to you. We can also help you – get in touch with your nearest sales office. By agreement we will take packing material back, if it is sorted. You must bear the costs of transport. For packing material that is returned to us unsorted or which we are not obliged to accept, we shall have to invoice you for any costs incurred.

Product and functional safety devices/applications or medical devices/applications

Our components are not developed, constructed or tested for the application as safety relevant component or for the application in medical devices.
Our products are not qualified at module and system level for such application.

In case buyer – or customer supplied by buyer – considers using our components in product safety devices/ applications or medical devices/applications, buyer and/or customer has to inform our local sales partner immediately and we and buyer and /or customer will analyze and coordinate the customer-specific request between us and buyer and/or customer.

Glossary

1) **Brightness:** Brightness values are measured during a current pulse of typically 1 ms, with an internal reproducibility of ±8 % and an expanded uncertainty of ±11 % (acc. to GUM with a coverage factor of k = 3).

2) **Operating Temperature:** The Operating Temperatur Top is referenced to the Solderpoint Ts of this device. Proper current derating must be observed to maintain junction temperature below the maximum.

3) **Reverse Operation:** This product is intended to be operated applying a forward current within the specified range. Applying any continuous reverse bias or forward bias below the voltage range of light emission shall be avoided because it may cause migration which can change the electro-optical characteristics or damage the LED.

4) **Chromaticity coordinate groups:** Chromaticity coordinates are measured during a current pulse of typically 1 ms, with an internal reproducibility of ±0.005 and an expanded uncertainty of ±0.01 (acc. to GUM with a coverage factor of k = 3).

5) **Forward Voltage:** The forward voltage is measured during a current pulse of typically 1 ms, with an internal reproducibility of ±0.05 V and an expanded uncertainty of ±0.1 V (acc. to GUM with a coverage factor of k = 3).

6) **Thermal Resistance:** Rth max is based on statistic values (6σ) used for Derating.

7) **Typical Values:** Due to the special conditions of the manufacturing processes of semiconductor devices, the typical data or calculated correlations of technical parameters can only reflect statistical figures. These do not necessarily correspond to the actual parameters of each single product, which could differ from the typical data and calculated correlations or the typical characteristic line. If requested, e.g. because of technical improvements, these typ. data will be changed without any further notice.

8) **Characteristic curve:** In the range where the line of the graph is broken, you must expect higher differences between single devices within one packing unit.

9) **Tolerance of Measure:** Unless otherwise noted in drawing, tolerances are specified with ±0.1 and dimensions are specified in mm.

10) **Tape and Reel:** All dimensions and tolerances are specified acc. IEC 60286-3 and specified in mm.

Revision History

Version	Date	Change
1.0	2026-11-24	Initial Version

EU RoHS and China RoHS compliant product
此产品符合欧盟 RoHS 指令的要求；
按照中国的相关法规和标准，
不含有毒有害物质或元素。

Published by ams-OSRAM AG
Tobelbader Strasse 30, 8141 Premstaetten, Austria
Phone +43 3136 500-0
ams-osram.com
© All rights reserved